AN2451
Application note

ST7540 FSK powerline transceiver design guide for AMR

Introduction

The ST7540 reference design has been developed as a useful tool to demonstrate how a small, high-performance powerline node can be built using the ST7540 FSK transceiver.

With this reference design, it is possible to evaluate the ST7540 features, in particular, its transmitting and receiving performances through actual communication on the power line.

The ST7540 reference design may be considered to be composed of three main sections:

- Power supply section, specifically tailored to match powerline coupling requirements and to operate within a wide range of the input mains voltage
- Modem and crystal oscillator section
- Line coupling interface section

The coupling interface is designed to allow the ST7540 FSK transceiver to transmit and receive on the mains using 72 kHz carrier frequencies, within the European CENELEC standard A-band specified for automatic meter reading.

Figure 1. ST7540 reference design board with outline dimensions

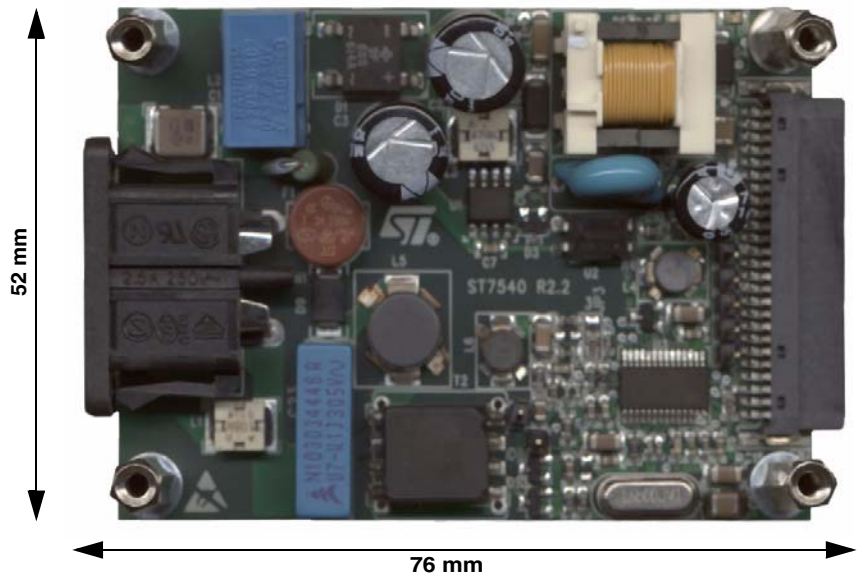

As it can be seen from the picture above, a special effort has been made to obtain a very compact reference design board, while keeping the focus on transmission and receiving performances.

Note: The information provided in this application note refers to EVALST7540-1 reference design board.

Contents

1 Electrical characteristics 7

2 Safety precautions 9

3 ST7540 FSK powerline transceiver description 10

4 Evaluation tools description 11

5 Board description 13

5.1 Coupling interface 18

5.1.1 Tx active filter 19

5.1.2 Tx passive filter 20

5.1.3 Rx passive filter 22

5.1.4 Input impedance 24

5.2 Conducted disturbances 25

5.2.1 Conducted emissions 25

5.2.2 Noise immunity 26

5.3 Thermal design 29

5.4 Oscillator section 32

5.5 Surge and burst protection 32

5.6 50-pin connector for the EVALCOMMBOARD 35

5.7 Power supply 36

6 Performance and ping tests 41

7 Application ideas 42

7.1 Three-phase architecture 42

7.2 Zero crossing detector 42

7.3 Received Signal Strength Indicator (RSSI) 44

7.4 Nonisolated coupling 45

7.5 DC powerline applications 46

7.6 110 and 132.5 kHz coupling circuit 46

8 Troubleshooting 49

Appendix A Board layout 51

9 List of normative references 54

10 Revision history 54

List of figures

Figure 1. ST7540 reference design board with outline dimensions . . . 1
Figure 2. Typical curve for output current limit vs. RCL value . . . 9
Figure 3. ST7540 Transceiver block diagram . . . 10
Figure 4. Complete evaluation system including a PC, an EVALCOMMBOARD and the EVALST7540-1 board. . . . 11
Figure 5. ST7540 powerline modem demonstration kit with control register window . . . 12
Figure 6. Positioning of the various sections of the board . . . 13
Figure 7. Modem and coupling interface schematic . . . 14
Figure 8. Power supply schematic . . . 15
Figure 9. Schematic of Rx and Tx filters . . . 19
Figure 10. Measured frequency response of the Tx active filter (typical curve). . . . 20
Figure 11. Simulated frequency response of the Tx active filter with components tolerance effect. . . 20
Figure 12. Measured frequency response of the Tx active + passive filters connected to the CISPR network (typical curve) . . . 22
Figure 13. Simulated frequency response of the Tx active + passive filters connected to the CISPR network with the components tolerance effect . . . 22
Figure 14. Measured frequency response of the Rx passive filter (typical curve) . . . 23
Figure 15. Simulated frequency response of the Rx passive filter with components tolerance effect . 24
Figure 16. Measured input impedance magnitude of coupling interface in Tx mode (typical curve) . . 25
Figure 17. Measured input impedance magnitude of coupling interface in Rx mode (typical curve). . 25
Figure 18. Conducted emissions test setup . . . 26
Figure 19. Output spectrum (typical) at 72 kHz, 2400 baud, deviation 1, fixed transmitted tone = "1", mains 220 V_{ac} . . . 26
Figure 20. Narrow-band conducted interference test setup . . . 27
Figure 21. Measured BER vs. SNR curve (typical), white noise . . . 28
Figure 22. SNR vs. frequency curve (typical) at BER = 10-3. . . . 28
Figure 23. PCB copper dissipating area for ST7540 reference design board . . . 29
Figure 24. Packet-fragmented transmission . . . 30
Figure 25. Equivalent model of the thermal impedance qJA of the HTSSOP28 package with exposed pad . . . 30
Figure 26. Output current vs. supply current typical curve for ST7540 in Tx mode . . . 31
Figure 27. Dissipated power vs. load impedance modulus typical curve for ST7540 reference design board. . . . 31
Figure 28. A recommended oscillator section layout for noise shielding . . . 32
Figure 29. Common mode disturbances protection - positive disturbance . . . 33
Figure 30. Common mode disturbances protection - negative disturbance. . . . 34
Figure 31. Differential mode disturbances protection . . . 34
Figure 32. Scheme of the connector for the EVALCOMMBOARD . . . 35
Figure 33. Typical waveforms at 230 V_{ac}: open load. . . . 39
Figure 34. Typical waveforms at 230 V_{ac}: full load . . . 39
Figure 35. Typical waveforms at 265 V_{ac}: short-circuit . . . 39
Figure 36. Typical waveforms at 265 V_{ac}: startup . . . 39
Figure 37. Load regulation . . . 40
Figure 38. SMPS efficiency curve . . . 40
Figure 39. ST7540 powerline modem demonstration kit window for the master board . . . 41
Figure 40. Scheme of principle for three-phase architecture . . . 42
Figure 41. Schematic of a zero crossing detection circuit for nonisolated coupling. . . . 43
Figure 42. Schematic of a zero crossing detection circuit for isolated coupling. . . . 44
Figure 43. ZC_OUT vs. AC mains waveforms . . . 44

Figure 44. Peak detector electrical schematic 45
Figure 45. Measured DC_OUT Vs. AC_IN peak detector response 45
Figure 46. Example schematic for nonisolated solution. 46
Figure 47. Line coupling interface for 110 kHz channel. 47
Figure 48. Line coupling interface for 132.5 kHz channel 48
Figure 49. PCB layout - component placing 51
Figure 50. PCB layout - top view 52
Figure 51. PCB layout - bottom view 53

List of tables

Table 1. Electrical characteristics of the ST7540 reference design 7
Table 2. Output voltage level setting through V_{sense} partitioning - typical values. 8
Table 3. Bill of materials 16
Table 4. ST parts on the ST7540 reference design board 18
Table 5. Line coupling transformer specifications. 21
Table 6. Noise immunity test settings 27
Table 7. 50-pin connector digital signals 36
Table 8. 50-pin connector analog signals 36
Table 9. 50-pin connector power connections 36
Table 10. SMPS specifications 37
Table 11. SMPS transformer specifications 37
Table 12. Document revision history 54

1 Electrical characteristics

Table 1. Electrical characteristics of the ST7540 reference design

Parameter	Value			Notes
	Min	Typ	Max	
Operating conditions				
Ambient operating temperature			85 °C	If ST7540 junction temperature exceeds 180 °C, device shuts down
Transceiver section				
Transmitting specifications (Tx mode)				
Selected channel frequency		72 kHz		FSK carrier
Transmitting output voltage level at mains output		$2V_{RMS}$	$2.25V_{RMS}$	R7=6.2 kΩ, R8=1.5 kΩ. See *Table 2*
Transmitting output current limit		$500mA_{RMS}$		R6=1.3 kΩ. See *Figure 2*
2nd Harmonic distortion at mains output			$-55dB_C$	Loaded with CISPR 16-1 network
3rd Harmonic Distortion at mains output			$-61dB_C$	Loaded with CISPR 16-1 network
50 Hz attenuation		100dB		
Receiving specifications (Rx mode)				
Minimum detectable Rx signal		49 $dBuV_{RMS}$		BER<10^{-3}, negligible noise
Auxiliary supply				
5 V Regulated voltage	-5%	5.05 V	+5%	ST7540 Internally generated
5 V Current capability			50 mA	
3.3 V Regulated voltage	-5%	3.3 V	+5%	ST7540 Internally generated
3.3 V Current capability			50 mA	

Table 1. Electrical characteristics of the ST7540 reference design (continued)

Parameter	Value			Notes
	Min	Typ	Max	
Power supply section				
AC mains voltage range	85 V		265 V	
Mains frequency		50-60 Hz		
Output voltage	-10%	12.3 V	+10%	Green LED ON
Output voltage ripple			1%	I_{OUT} = 500 mA, V_{in}=85 V_{ac}
Peak output current			500 mA	
Output power			5.6 W	
Efficiency at Pout=3.5 W		70%		
Nominal transformer Isolation(1)		4 kV		Primary to secondary/ secondary to auxiliary
Number of holdup cycles	0			
Input power	100 mW			
Switching frequency	-10%	65 kHz	+10%	Transceiver section in Tx mode

1. ST does not guarantee transformer isolation. ST assumes no responsibility for the consequences that may arise from that risk.

Table 2. Output voltage level setting through V_{sense} partitioning - typical values

V(PA_OUT) [V_{RMS}]	V(PA_OUT) [dBuV_{RMS}]	R_7 [kΩ]	R_8 [kΩ]
0.500	114	0.620	1.5
0.800	118	1.8	1.5
1.000	120	2.7	1.5
1.125	121	3.3	1.5
1.250	122	3.9	1.5
1.500	124	5.1	1.5
2.000	126	6.2	1.5
2.250	127	8.2	1.5
2.500	128	9.1	1.5
3.160	130	11	1.5

Figure 2. Typical curve for output current limit vs. R_{CL} value

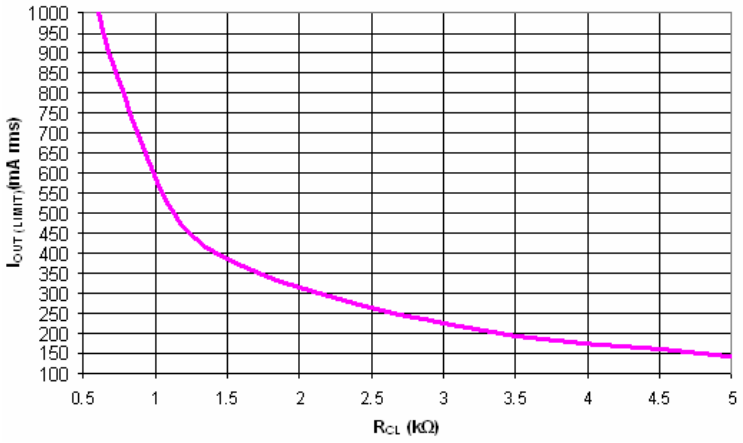

2 Safety precautions

The board must be used only by expert technicians. Due to the high voltage (220 V ac) present on the parts which are not isolated, special care should be taken with regard to people's safety.

There is no protection against high voltage accidental human contact.

After disconnection of the board from the mains, none of the live parts should be touched immediately because of the energized capacitors.

It is mandatory to use a mains insulation transformer to perform any tests on the high voltage sections (see circuit sections highlighted in *Figure 7* and *Figure 8*) in which test instruments like Spectrum Analyzers or Oscilloscopes are used.

Do not connect any oscilloscope probes to high voltage sections in order to avoid damaging instruments and demonstration tools.

Warning: ST assumes no responsibility for any consequences which may result from the improper use of this tool.

3 ST7540 FSK powerline transceiver description

ST7540 transceiver uses Frequency Shift Keying (FSK) modulation to perform a half-duplex communication on a powerline network. It operates from a 7.5 to 13.5 V single supply voltage (Vcc) and integrates a power amplifier (PA), which is able to drive low line impedance, and two linear regulators providing 5 V and 3.3 V.

Figure 3. ST7540 Transceiver block diagram

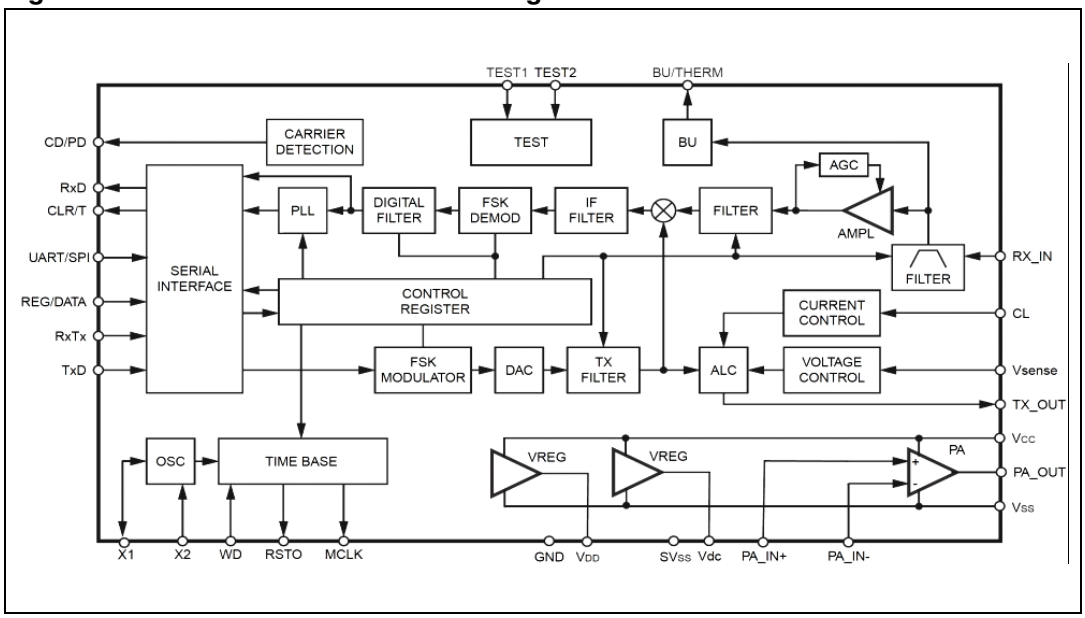

The ST7540 can communicate using eight different communication channels (60, 66, 72, 76, 82.05, 86, 110, 132.5 kHz), four baud rates (600, 1200, 2400, 4800) and two deviations (1 and 0.5). Additional functions are included, such as watchdog, automatic control on PA output voltage and current, carrier/preamble detection and band-in-use signaling, transmission time-out, and thermal shutdown.

The transceiver, which is dedicated only to physical communication, operates with a microcontroller whose aim is to manage the communication protocol stack. A reset output (RSTO) and a programmable clock (MCLK) can be provided to the microcontroller by the ST7540 in order to simplify the external logic and circuitry.

The host controller can exchange data with the transceiver through a serial interface, programmable to operate either in UART (CLR/T data clock not used) or in SPI mode. Communication on the power line can be either synchronous or asynchronous to the data clock that is provided by the transceiver at the programmed baud rate.

When in transmission mode (i.e. RxTx line at low level), the ST7540 samples the digital signal on the TxD line at the programmed baud rate and modulates it in a FSK sinusoidal output on the Tx_OUT line. This signal is then externally fed into the power amplifier to add current capability. The power amplifier can also introduce gain and active filtering to the signal, just using few external passive components. The resulting signal on the PA_OUT line is coupled to the power line.

When in receiving mode (i.e. RxTx line at high level), an incoming FSK signal on the Rx_IN line is demodulated and the digital output is available for the microcontroller on the RxD pin.

The device also recovers the synchronism of the received signal using an internal PLL. The recovered clock is present on CLR/T output.

The ST7540 operating parameters can be set by means of an internal control register, accessible only through the SPI host interface.

4 Evaluation tools description

The complete evaluation system for the ST7540 powerline communication consists of:

- a PC using the "ST7540 Power Line Modem Demo Kit" software tool
- one EVALCOMMBOARD hosting the ST7 microcontroller
- one ST7540 reference design board (EVALST7540-1).

The correct procedure for connecting the EVALST7540-1 and the EVALCOMMBOARD is as follows:

1. Connect the EVALST7540-1 and the EVALCOMMBOARD
2. Connect the ac mains cable to the EVALST7540-1 and the USB cable to the EVALCOMMBOARD
3. Connect the EVALST7540-1 to the ac mains supply
4. Connect the EVALCOMMBOARD to the PC via the USB cable.

Warning: Follow the connection procedure to avoid damaging the boards.

Figure 4. Complete evaluation system including a PC, an EVALCOMMBOARD and the EVALST7540-1 board

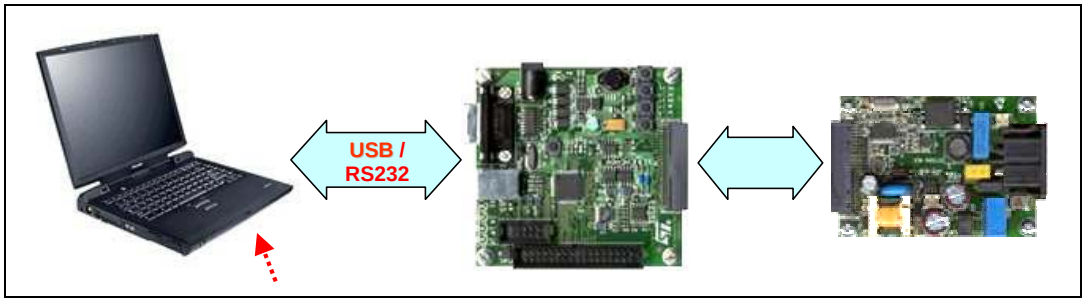

Figure 5. ST7540 powerline modem demonstration kit with control register window

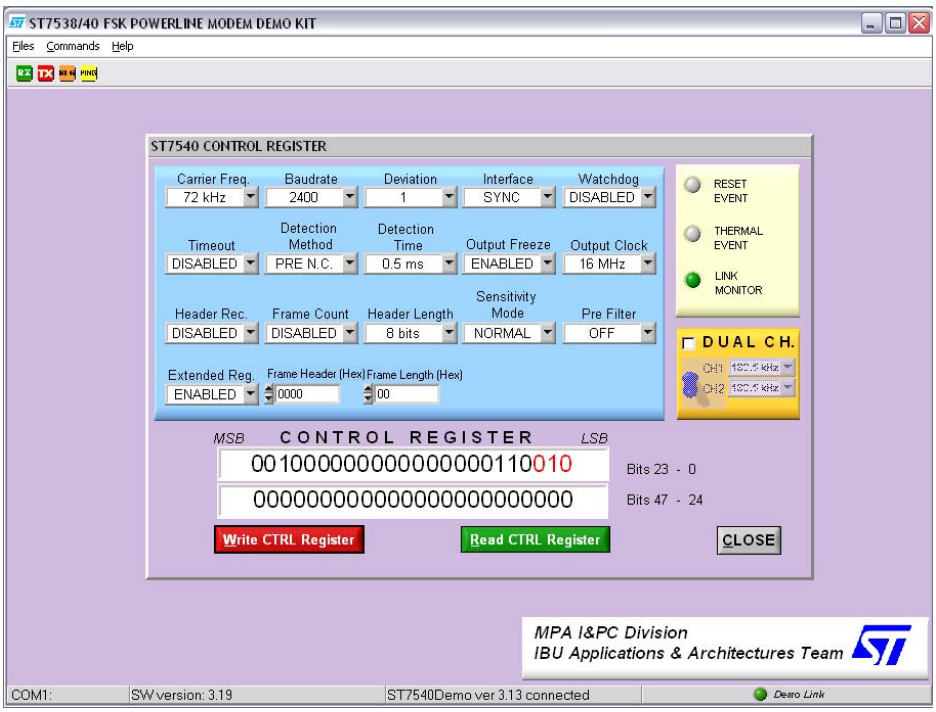

The complete chain, controlled by the ST7540 powerline modem demonstration kit, can set up real communication at bit level, simply by sending or receiving a user-defined bit stream.

It is possible to establish a half-duplex communication with two of these communication nodes (two chains) connected to each other. In order to better evaluate communication between two nodes, the ST7540 powerline modem demonstration kit has some particular features, including:

- Frame synchronization: a byte synchronization header can be added to the to the exchanged data to set up a simple protocol, intended to test the capability of the system to correctly receive the exact transmitted bit sequence. This can be done in two ways: via the ST7540 control register settings (the internal configuration register of the modem has a frame header field, in which an 8- or 16-bit header can be set) or via the Rx panel of the ST7540 powerline modem demonstration kit (setting a synchronization at SW level). A bit synchronization can be introduced as a simpler feature by enabling the preamble detection method in the control register panel and then inserting at least one "0101" or one "1010" sequence at the beginning of the transmitted bit stream.
- Ping session: a master-slave communication with automatic statistics calculation can be very useful to test a point-to-point or a point-to-multipoint powerline communication network, thus providing a method to evaluate reachability of each node in the network. For further details about the ST7540 powerline modem demonstration kit, please refer to the user manual UM0239 "ST7540 power line modem demo kit graphical user interface".

5 Board description

The ST7540 reference design is composed of the following sections:

- Power supply section, based on ST's VIPer12A-E IC
- ST7540 modem and crystal oscillator section
- Line coupling interface section, with three subsections:
  - Transmission active filter
  - Transmission passive filter
  - Receiving passive filter.

The board also has two connectors, which allow the user to plug the mains supply on one side of it and the I.B.U. communication board on the other side.

Figure 6. Positioning of the various sections of the board

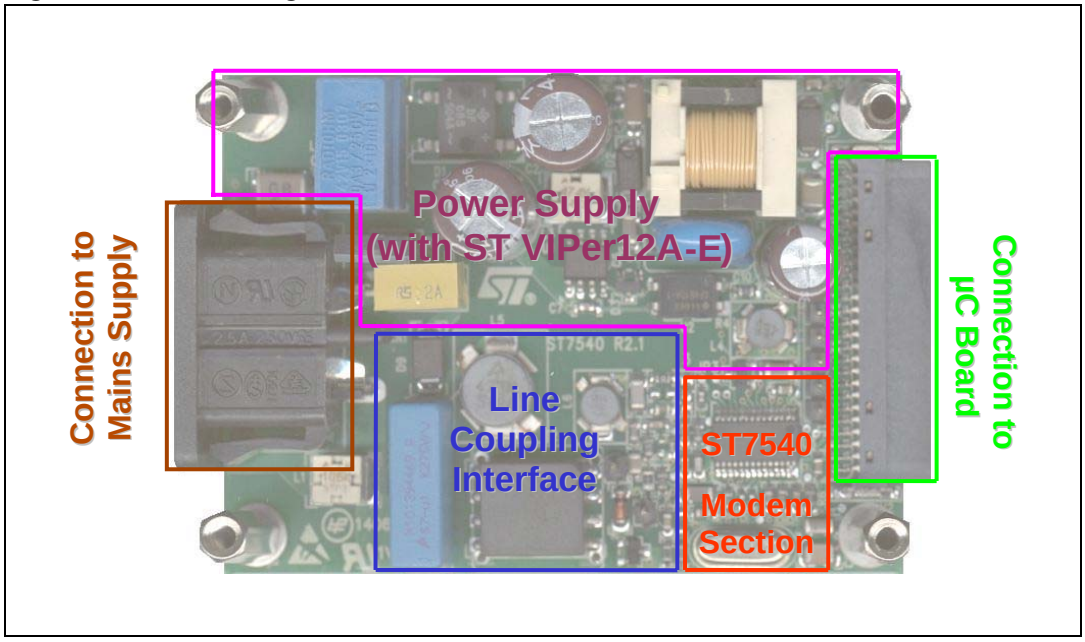

The schematics of the whole reference design appear in *Figure 7* and *8*. *Figure 7* shows the modem and the coupling Interface circuits, while *Figure 8* represents the power supply circuit. In both the schematics, high voltage regions are highlighted.

Table 3 lists the components used to develop the reference design board. All parts have been selected to give optimal performances.

The layout of the printed circuit is given in *Appendix A* - *Figure 49*, *Figure 50* and *Figure 51*.

Figure 7. Modem and coupling interface schematic

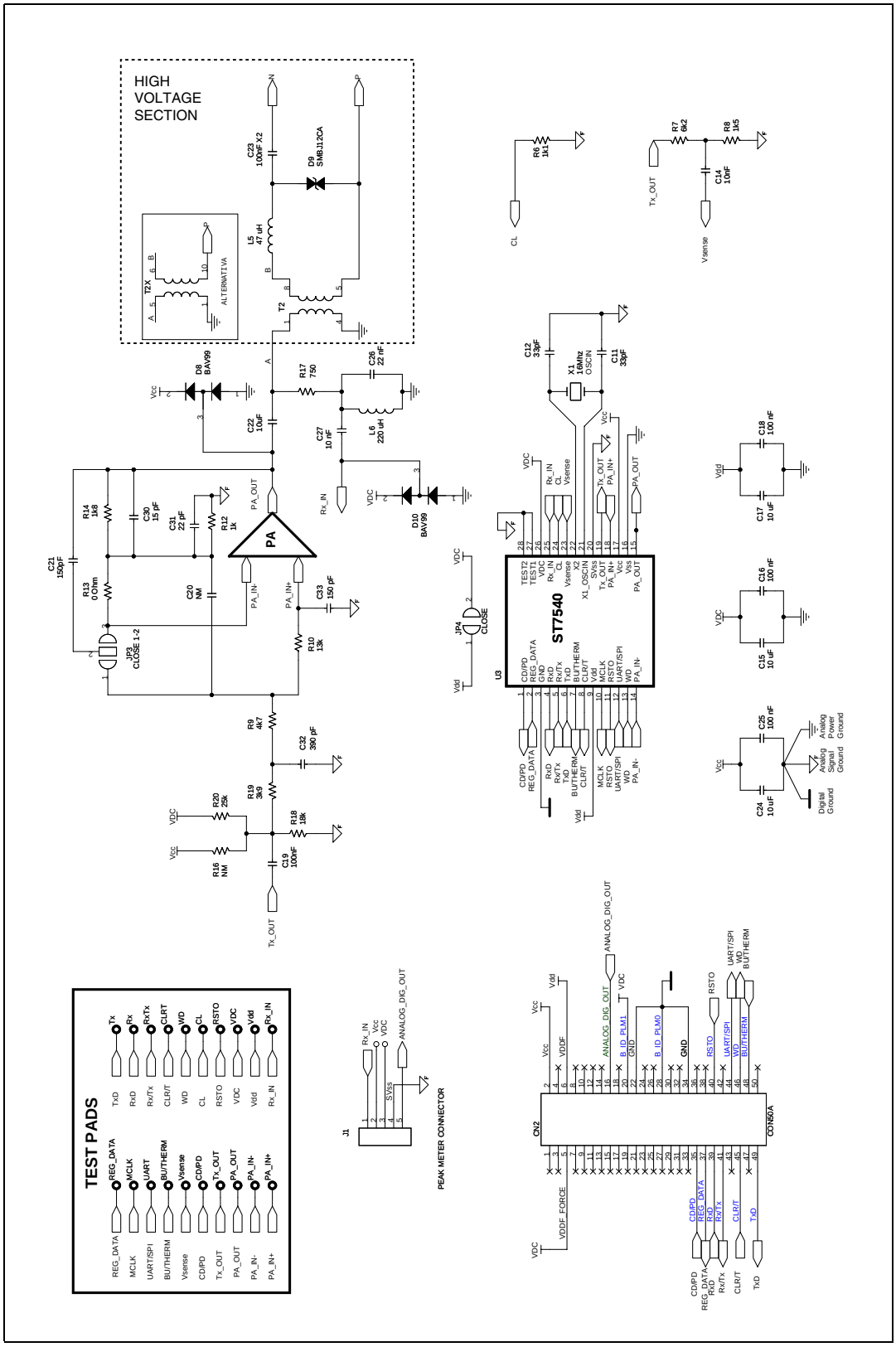

Figure 8. Power supply schematic

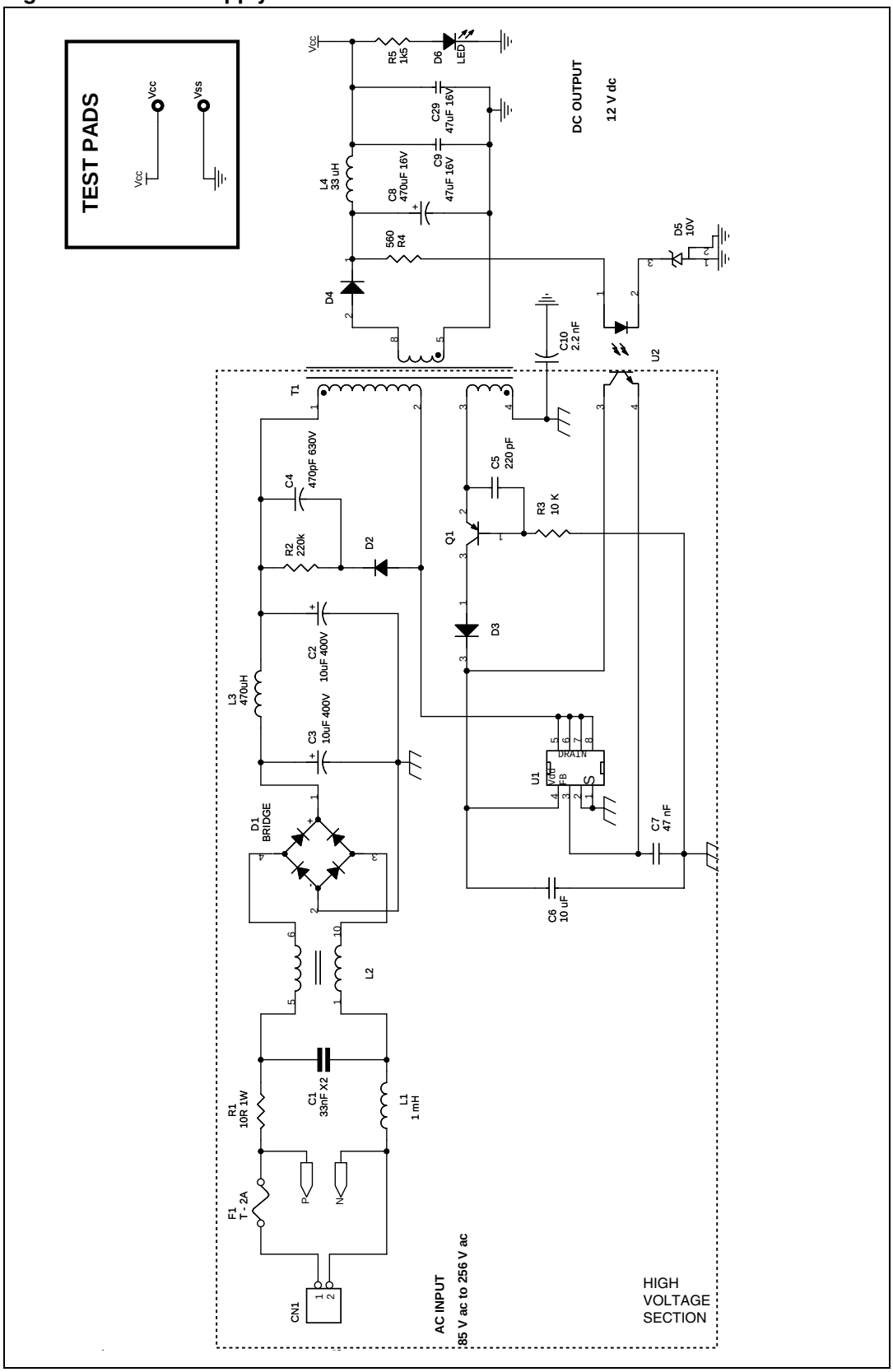

Table 3. Bill of materials

Item	Qty	Part	Value	Description
1	21	WD, V_{sense}, Vdd, Vcc, VDC, RxD, UART/SPI, Tx_OUT, TxD, RxTx, RSTO, REG_DATA, PA_OUT, PA_IN-, PA_IN+, MCLK, GND, CLR/T, CL, CD/PD, BU/THERM	Testpoint	
2	1	CN1	Header 2	Mains supply connector
3	1	CN2	CON50A	50 pins SMT right angle female p=1.27 mm
4	1	C1	33 nF X2	Murata GA355XR7-GB333K
5	2	C2,C3	10 µF / 400 V	Yageo SE-K / Nichicon VK 20%
6	1	C4	470 pF / 1 kV	TDK C4520X7R-3A471K
7	1	C5	220 pF / 50 V	TDK C0603C0G-1E220J
8	4	C6,C15,C17,C24	10 µF / 16 V	TDK C3216X7R-1C106MT
9	1	C7	47 nF / 25 V	Murata GRM188R7-1E473K
10	1	C8	470 µF / 16 V	Rubycon 3M0319 / Yageo SE-K 20%
11	2	C9,C29	47 µF / 16 V	Murata GRM32ER6-1C476K
12	1	C10	2.2 nF Y1	TDK CD12-E2GA222MYNS / Murata DE1E3-KX222M
13	2	C11,C12	33 pF	TDK C1005C0G-1H330J
14	1	C13	NM	
15	2	C14,C27	10 nF	Murata GRM188R7-1H103K
16	4	C16,C18,C19,C25	100 nF	TDK C1608X7R-1H104K
17	1	C20	NM	
18	1	C21	150 pF	Murata GRM1555C-1H151J
19	1	C22	10 µF	Murata GRM21BR6-1A106K / TDK C2012X5R-0J106K
20	1	C23	100 nF X2	EPCOS B32922-A2683K p=15 mm 10%
21	1	C26	22 nF	Murata GRM21B5C-1H223J / TDK C3216C0G1H223J
22	1	C30	15 pF	Murata GRM1555C-1H150J
23	1	C31	22 pF	Murata GRM1555C-1H220J
24	1	C32	390 pF	Murata GRM1885C-1H391J
25	1	C33	150 pF	Murata GRM1885C-1H151J
26	1	D1	DF06S	600 V - 1.5 A bridge rectifier

Table 3. Bill of materials (continued)

Item	Qty	Part	Value	Description
27	1	D2	STTH1L06A	DO214AC
28	1	D3	BAS16 2L	BAS21 also suitable
29	1	D4	STPS1H100	DO214AC
30	1	D5	BZX84C10	10V Zener
31	1	D6	LED	Green LED
32	2	D8,D10	BAV99	Dual SMD diode
33	1	D9	SMBJ12CA-TR	12V bidirectional transil diode
34	1	F1	2 A T	Time-lag
35	1	JP3	Close 1-2	
36	1	J1	Peak meter	
37	1	L1	1 mH	Epcos B82442-H1105K
38	1	L2	2x10 mH	Radiohm 42V15 0.3A
39	1	L3	470 µH	Epcos B82442-A1474K
40	1	L4	33 µH	Epcos B82462-A4333K
41	1	L5	47 µH	Epcos B82464-A4473K / Würth 744-775-147K
42	1	L6	220 µH	Epcos B82462-A4224K / Würth 744-774-222K
43	1	Q1	BC857BL	
44	1	R1	10R 1 W	Metal oxide - radial
45	1	R2	220 kΩ	
46	1	R3	10 kΩ	
47	1	R4	560	
48	2	R5,R8	1K5	
49	1	R6	1K1	
50	1	R7	6K2	
51	1	R9	4K7	
52	1	R10	13 kΩ	
53	1	R12	1 kΩ	
54	1	R13	0 (jumper)	
55	1	R14	1K8	
56	2	R15,R16	NM	
57	1	R17	750	
58	1	R18	18 kΩ	
59	1	R19	3K9	

Table 3. Bill of materials (continued)

Item	Qty	Part	Value	Description
60	1	R20	25 kΩ	
61	1	T1	SMPS transformer	TDK SRW12.6EF-E07H013 / Würth S06-100-057
62	1	T2	Line transformer	V_{ac} T60403-K5024-X044 / Radiohm 69H14-2101
63	1	U1	VIPer12AS-E	Voltage regulator
64	1	U2	SFH610-A	Optoswitch
65	1	U3	ST7540	Powerline transceiver
66	1	X1	16 MHz	Jauch Q 16.0-SS2-16-30/50-FU

Table 4. ST parts on the ST7540 reference design board

Value	Description
ST7540	Powerline transceiver
VIPer12AS-E	SMPS controller / switch
STTH1L06A	Ultrafast diode
STPS1H100	Schottky diode
SMBJ12CA-TR	12 V bidirectional transil diode

5.1 Coupling interface

The mains coupling interface is composed of three different filters: the Tx active filter, the Tx passive filter and the Rx passive filter.

All three filters are described in the sections *Section 5.1.1*, *5.1.2*, and *5.1.3*. In each section, calculations and measured frequency responses are given.

The filters are quite sensitive to the components' value tolerance. Actual components used in the ST7540 reference design have the following tolerances:

- +/- 10% for coils and for the X2 capacitor
- +/- 1% for SMD resistors
- +/- 5% for SMD ceramic capacitors.

To evaluate sensitivity of the filters to the tolerances listed above, the following sections include simulated responses of the filters with Montecarlo statistical analysis. Statistical simulation helps understanding the relationship between components' value tolerance and variations on the responses of the filters. In simulation curves, the ideal response is drawn in blue, while red curves indicate statistical variations generated through simulation.

Figure 9. Schematic of Rx and Tx filters

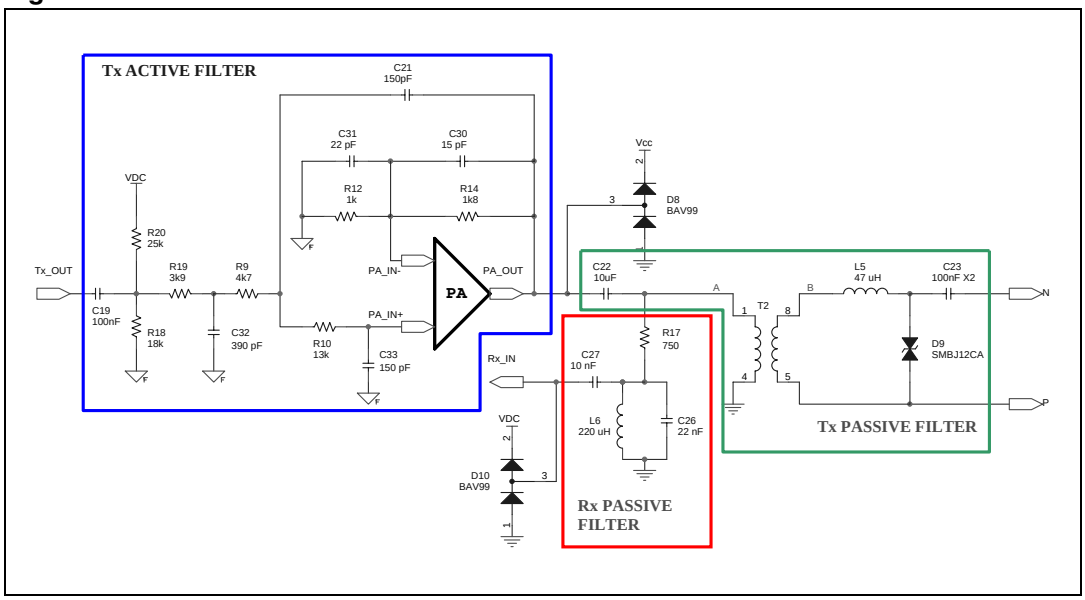

5.1.1 Tx active filter

The Tx active filter is based on the ST7540 internal Power Amplifier (PA), whose input and output pins are available externally to allow a filtering network to be tailored around the amplifier.

For the ST7540 reference design board, a 3-pole low-pass filter has been developed by cascading a simple R-C low-pass stage and a Sallen-Key 2-pole cell with 9dB gain. The R19-C32 low-pass stage is aimed at introducing attenuation starting from approximately an octave above the transmission channel frequency.

The transfer function of the 2nd order Sallen-Key cell is:

Equation 1

$$A(s) = \frac{A_0}{\frac{s^2}{\omega_C^2} + \frac{s}{\omega_C \bullet Q} + 1}$$

where $A_0 = \left(1 + \frac{R_{14}}{R_{12}}\right)$, $\omega_C = \frac{1}{\sqrt{R_9 \bullet R_{10} \bullet C_{33} \bullet C_{21}}}$ and $Q = \frac{\sqrt{R_9 \bullet R_{10} \bullet C_{33} \bullet C_{21}}}{R_9 C_{33} + R_{10} C_{21} + R_9 C_{21}(1 - A_0)}$

The corner frequency may be calculated as:

Equation 2

$$f_c = \frac{1}{2\pi \bullet \sqrt{R_9 \bullet R_{10} \bullet C_{33} \bullet C_{21}}} = 135.7\text{kHz}$$

Figure 10 represents the measured transfer function of the Tx active filter. It shows good rejection on both the 2nd and 3rd harmonic frequencies for the 72 kHz signal.

Figure 10. Measured frequency response of the Tx active filter (typical curve)

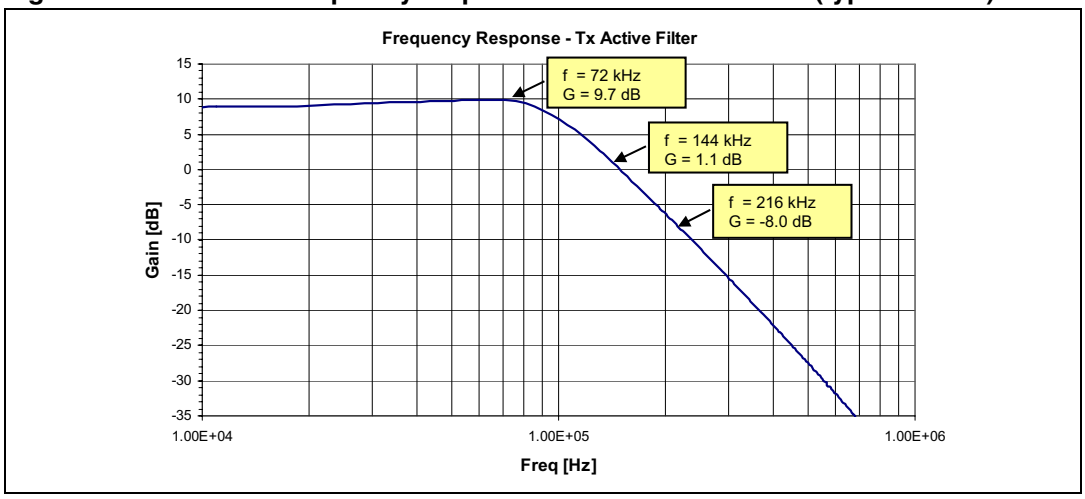

Simulation of the Tx active filter response against components' tolerance, depicted in *Figure 11*, shows +/- 1 dB variation in gain module at 72 kHz.

Figure 11. Simulated frequency response of the Tx active filter with components tolerance effect

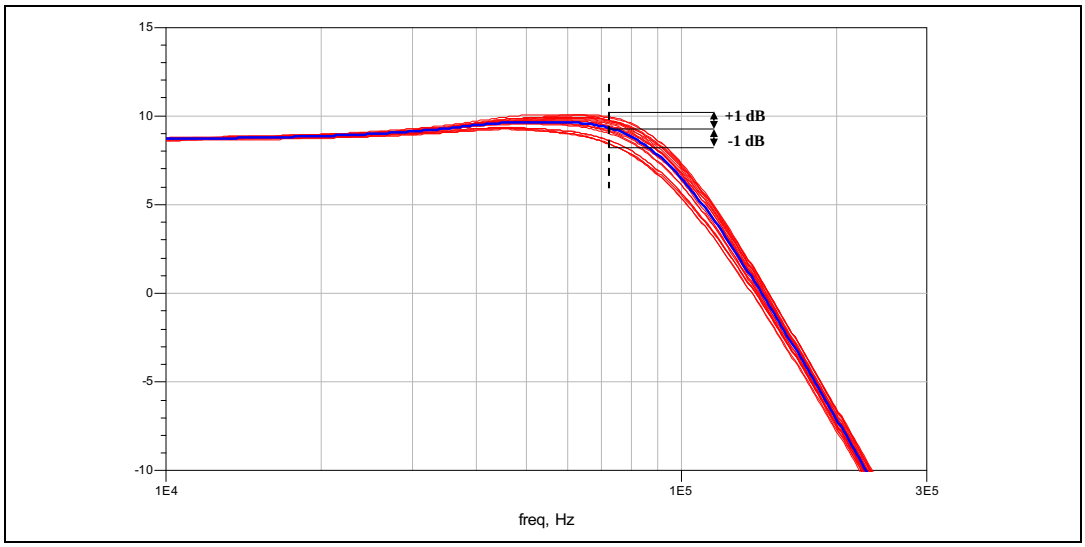

5.1.2 Tx passive filter

Coupling to the power line requires some passive components in addition to the active filtering stage. In particular, Tx passive filter section is made of the decoupling capacitor C22, line transformer T2, inductor L5 and X2 safety capacitor C23.

L5 has been accurately chosen to have a high saturation current (>1 A) and a very low equivalent series resistance (<0.2 Ω), to limit distortion and insertion losses even with heavy line load. Center frequency for the series resonance is calculated as:

Equation 3

$$f_c = \frac{1}{2\pi\sqrt{L_5 \bullet C_{23}}}$$

provided that the dc-decoupling capacitor C22 is much greater than C23 (in this case, 100 times greater) and that parasitic components of the transformer have negligible effects on the filtering action.

Particular attention has been paid in choosing the line transformer. The required characteristics are listed in *Table 5*.

In order to have a good power transfer and to minimize the insertion losses, it is recommended to choose a transformer with a primary (shunt) inductance greater than 1mH and a series resistance lower than 0.5 Ω

Another important parameter is the leakage inductance. If it has a relevant value (10 to 50 uH), this can be used to design the coupling filter without inserting series inductance (L5, L6). The drawback, however, is the poor accuracy of this parameter, which can lead to a shift of the filter response and to bad coupling. Consequently, a low leakage inductance value (<1 µH) has been chosen, fixing the series inductance through a discrete component with greater accuracy.

The last specified parameter, the 4 kV insulation voltage requirement, is described and coded in the EN50065-4-2 CENELEC document.

Table 5. Line coupling transformer specifications

Parameter	Value
Turn ratio	1:1
Magnetizing inductance	>1 mH
Leakage inductance	<1 µH
DC resistance	<0.5 Ω
DC saturation current	>2 mA
Interwinding capacitance	< 50 pF
Withstanding voltage	4 kV

Figure 12 shows the measured response of the Tx active and passive filters, loaded with the CISPR network. The figure highlights a further filtering effect added by the passive L-C series resonant combined with the CISPR reactive load.

Figure 12. Measured frequency response of the Tx active + passive filters connected to the CISPR network (typical curve)

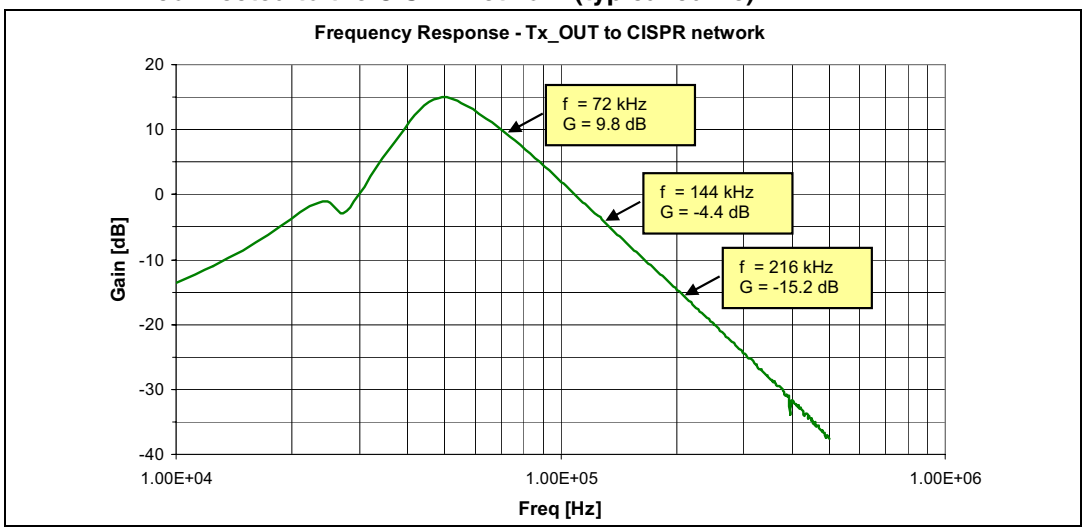

Figure 13. Simulated frequency response of the Tx active + passive filters connected to the CISPR network with the components tolerance effect

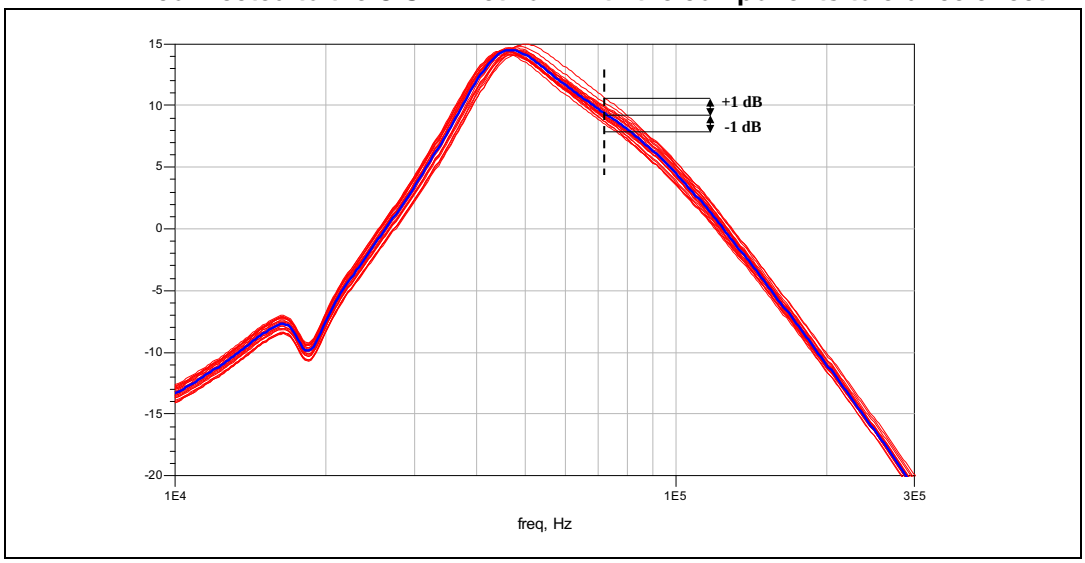

5.1.3 Rx passive filter

The Rx filter is made up of a resistor in series with a parallel L-C resonant. The transfer function of the filter can be written as:

Equation 4

$$R(s) = \frac{\dfrac{s \bullet L_6 + R_L}{R_{17}L_6C_{26}}}{s^2 + \dfrac{R_{17}R_LC_{26} + L_6}{R_{17}L_6C_{26}} \bullet s + \dfrac{R_{17} + R_L}{R_{17}L_6C_{26}}}$$

where R_L is the DC series resistance of the inductor (in our case, about 2.7 Ω). The center frequency and the quality factor of the filter can be expressed as:

Equation 5

$$fc = \frac{1}{2\pi} \bullet \omega_C = \frac{1}{2\pi}\sqrt{\frac{R_{17}+R_L}{R_{17}L_6C_{26}}} \cong \frac{1}{2\pi\sqrt{L_6C_{26}}},\quad Q = \frac{R_{17}L_6C_{26}}{R_{17}R_LC_{26}+L_6} \bullet \omega_C$$

The simplification made on *fc* formula is possible because $R_{17}>R_L$. Consequently, the quality factor and filter selectivity depend not only on R_{17}, but also on R_L. A higher R_L produces a lower steepness of the resonance, while a higher R_{17} gives a higher selectivity. Actual values of the components give a Q nearly equal to 6.

The R_L value impacts in a clearer way on insertion losses. To evaluate the relationship between R_L and the losses on the received signal, the following simplified expression of $|R(s)|$ at $f=f_c$ may be used:

Equation 6

$$|R(j \bullet 2\pi f_c)| \cong Q \bullet \frac{\omega_C \bullet L_6}{R_{17}} = \frac{1}{1 + R_L \bullet R_{17} \bullet \frac{C_{26}}{L_6}}$$

With actual values of the components, we get a loss of about 2 dB. The same calculation gives unitary transfer if R_L is set to zero.

Looking at the first way to express the module of the transfer function, it is possible to notice that a higher value of Q can help keeping the losses small. Nevertheless, a high value of Q would bring a higher sensitivity of the filter to the components tolerance.

Figure 14 shows the measured frequency response of the Rx passive filter. The filter has an actual -3 dB bandwidth equal to 12 kHz and an attenuation of about 2 dB at center frequency, just as expected.

Figure 14. Measured frequency response of the Rx passive filter (typical curve)

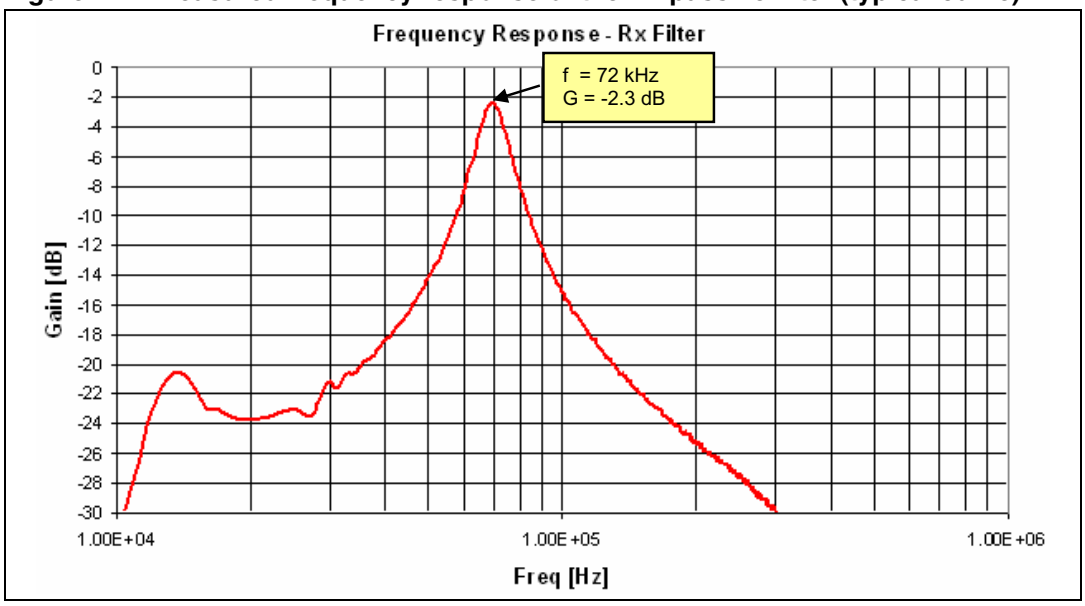

Figure 15 represents a simulation of the response of the Rx passive filter with the components tolerance effect. A worst case loss of nearly 2 dB can be observed at 72 kHz due to a shift on center frequency.

Figure 15. Simulated frequency response of the Rx passive filter with components tolerance effect

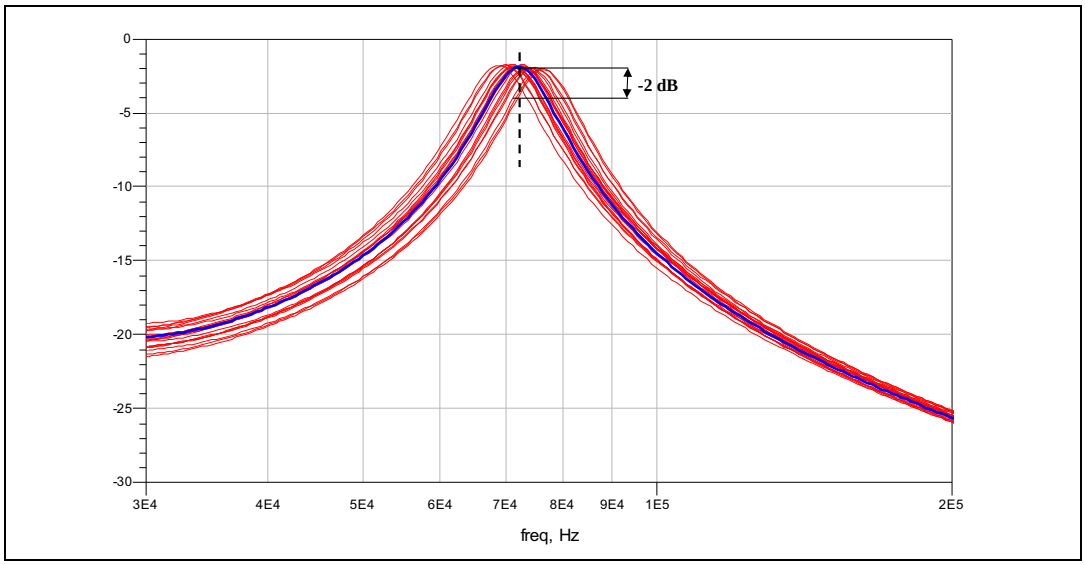

5.1.4 Input impedance

The input impedance of a powerline communication node is another critical point. *Figure 16* and *Figure 17* show the input impedance magnitude vs. frequency curves in both Tx and Rx mode. In both figures channel impedance point and the minimum impedance point are indicated.

The impedance magnitude values prove that the ST7540 reference design board is compliant with the EN50065-7 document, which sets the following minimum impedance constraints for this kind of equipment:

- Tx mode:
  - free in the range 3 to 95 kHz
  - 3 Ω from 95 to 148.5 kHz
- Rx mode:
  - 10 Ω from 3 to 9 kHz
  - 50 Ω between 9 and 95 kHz only inside signal bandwidth (free for frequencies outside signal bandwidth)
  - 5 Ω from 95 to 148.5 kHz

Figure 16. Measured input impedance magnitude of coupling interface in Tx mode (typical curve)

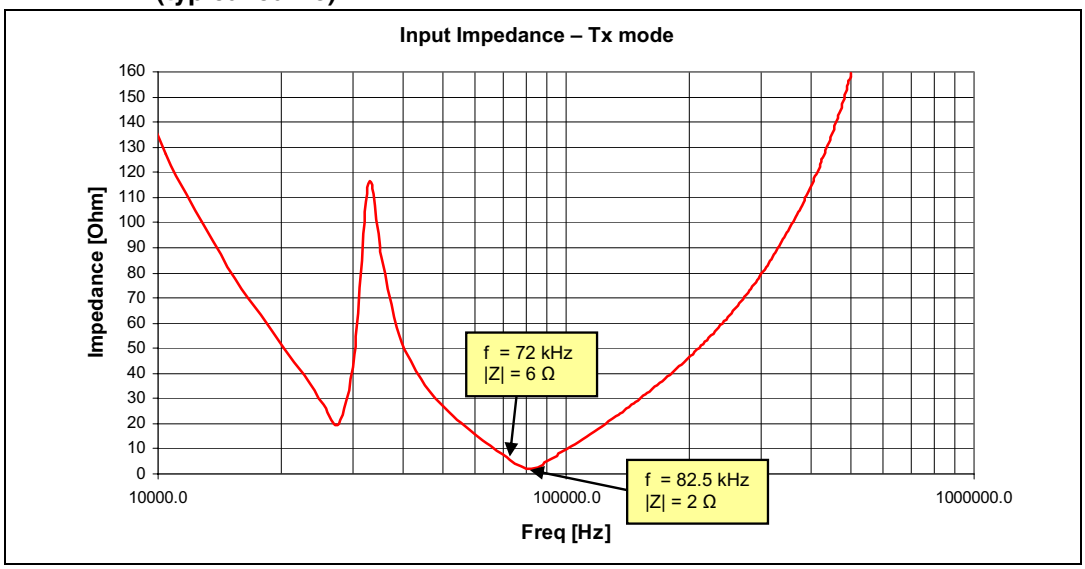

Figure 17. Measured input impedance magnitude of coupling interface in Rx mode (typical curve)

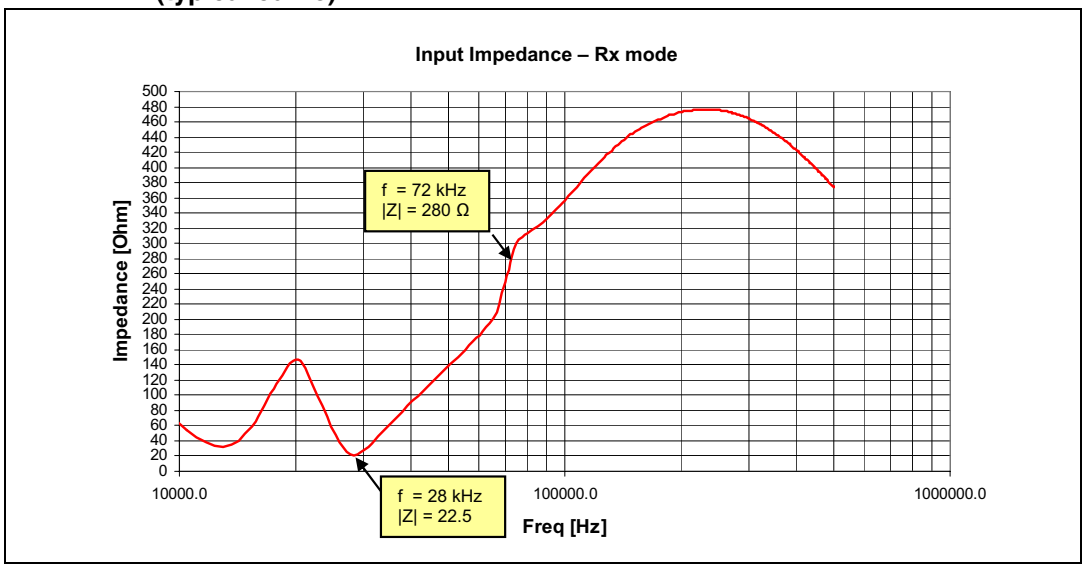

5.2 Conducted disturbances

5.2.1 Conducted emissions

The EN50065-1 standard describes the test setup and procedures for testing conducted emissions.

The conducted emissions measurements have been taken with 220 V_{ac} mains voltage. The test pattern consists of a continuous transmission of a fixed tone at a frequency of 70.8 kHz (72 kHz center frequency minus half the FSK frequency deviation, in this case 2400 Hz)

which corresponds to a symbol "1". The output signal measured at the CISPR Artificial Network has a value of 120 $dBuV_{RMS}$ which means a signal of 2 V_{RMS} on the mains output.

The spectrum analyzer performs a peak measurement instead of a quasi-peak measurement, as specified by EN50065-1. For continuous sinusoidal signals the two types of measurement give the same result.

Figure 18. Conducted emissions test setup

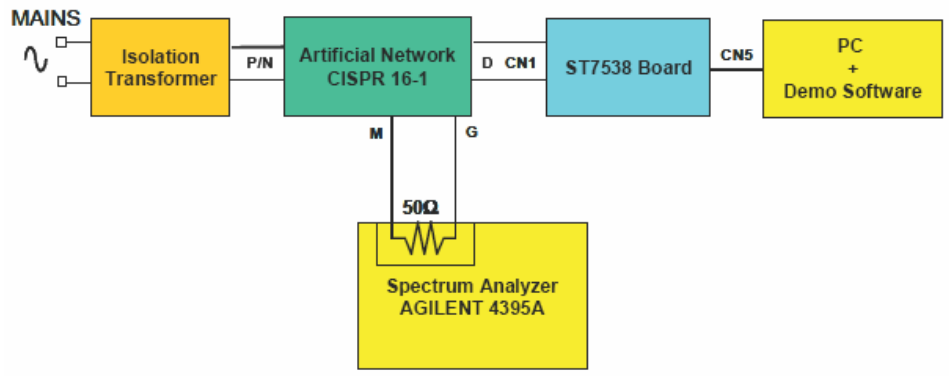

Figure 19 shows the results for the output spectrum measurement. The EN50065-1 disturbance limits mask (traced in red) may be compared to the typical output spectrum of the ST7540 reference design board.

Figure 19. Output spectrum (typical) at 72 kHz, 2400 baud, deviation 1, fixed transmitted tone = "1", mains 220 V_{ac}

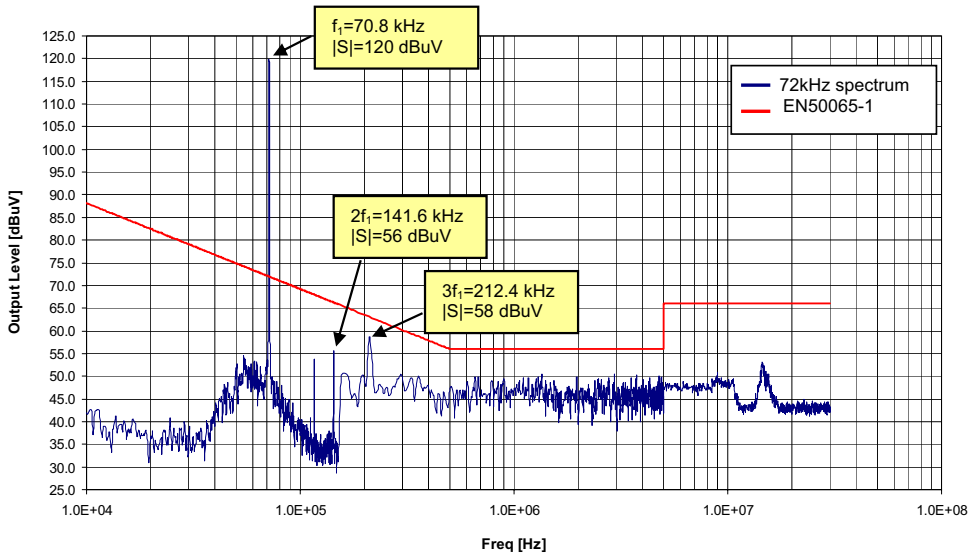

5.2.2 Noise immunity

The tests on immunity against white noise and narrow-band conducted interferences are based on two ST7540 reference design boards performing a simplex (unidirectional) communication. The first board transmits a given bit sequence, while the receiving board

passes the received bit stream to a BER tester software on a PC, which evaluates the percentage of correctly received bits.

The noise (white noise or sinusoidal interferer) is produced by a waveform generator and injected into the artificial network through an AC coupling circuit. *Figure 20* shows the test environment used to perform noise immunity tests.

Figure 20. Narrow-band conducted interference test setup

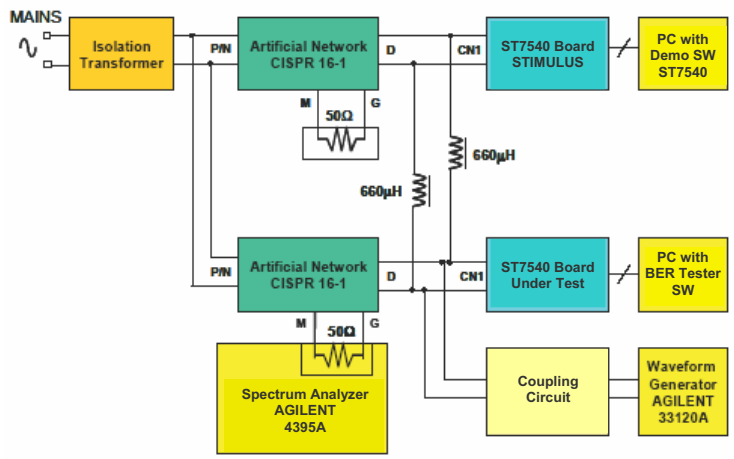

Table 6 reports the parameters for the test conditions settings.

The received signal and noise levels are measured at the mains connector of the board under test. The 3 kHz resolution bandwidth chosen for the Spectrum Analyzer allows measurement of the actual signal and noise levels as seen by the receiving ST7540 internal circuitry, programmed for 2400 baud.

Table 6. Noise immunity test settings

Parameter	Value
Received signal	86 dBuVrms
Frequency	72 kHz
Baud rate	2400
Deviation	1
Detection method	Carrier with conditioning
Detection time	3 ms
Sensitivity	High
Input filter	Off
Transmitted sequence	AACC h
S.A. resolution BW	3 kHz

Figure 21 represents the BER vs. SNR curve in the presence of white noise. It may be noted that a BER of 10^{-3} corresponds to a SNR around 12 dB, as expected from a nonideal FSK demodulator.

Figure 21. Measured BER vs. SNR curve (typical), white noise

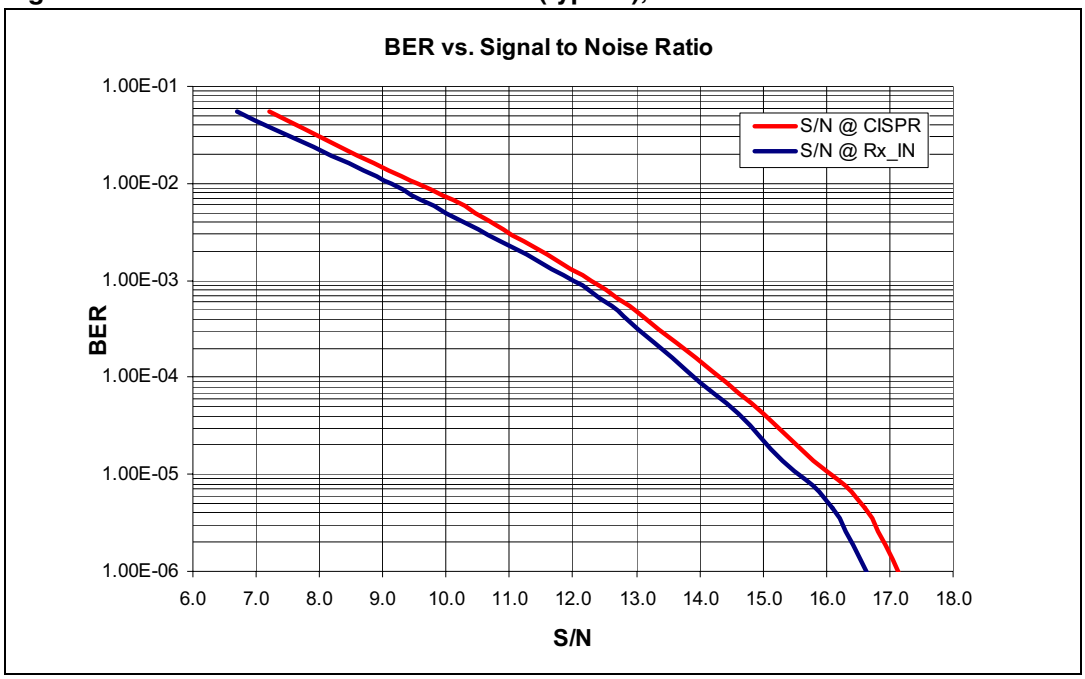

For narrow-band interference tests, two types of interfering noise have been used: a pure sinusoidal tone and an amplitude-modulated signal (modulating signal 1 kHz, modulation depth 80%). In both cases, the amplitude of the noise signal (of the carrier, for modulated signal) has been decreased until the measured BER was lower than 10^{-3} (one error every 1000 transmitted bits).

Figure 22 shows SNR vs. frequency curves for both a pure sinusoidal and an AM modulated interferer.

Figure 22. SNR vs. frequency curve (typical) at BER = 10^{-3}

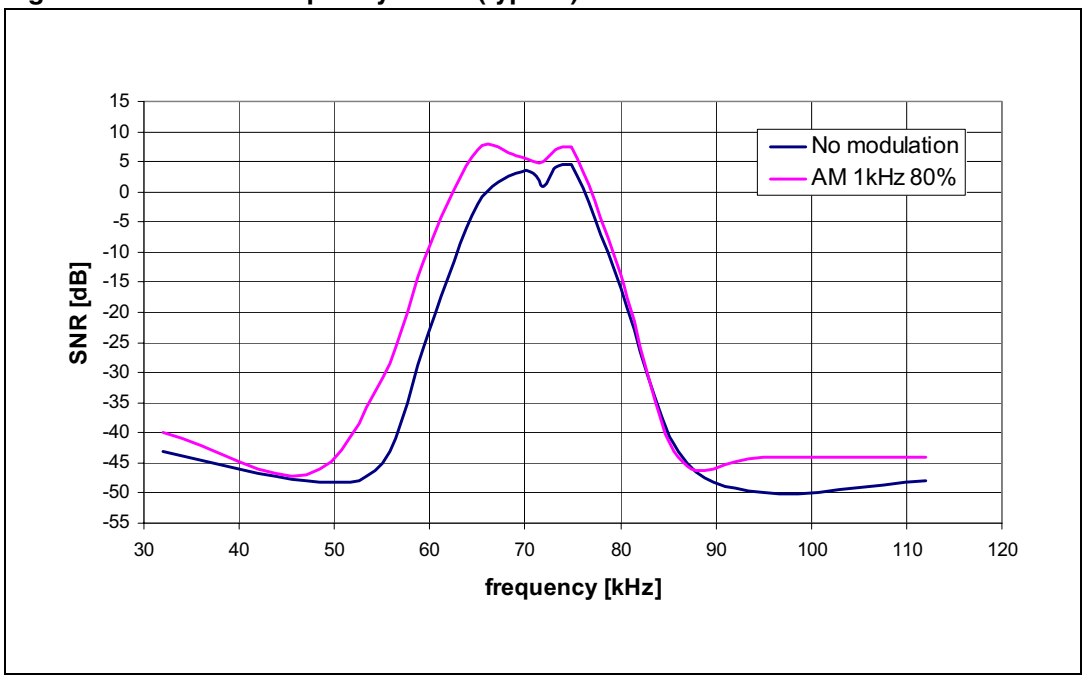

5.3 Thermal design

All heat dissipation is based on the heat exchange between the ST7540 IC, the PCB and the surrounding environment.

A large PCB copper area under the device is recommended to make an easier heat transfer from the ST7540 to the environment. The metallic slug under the device (exposed pad of HTSSOP28 package) must be properly soldered to the copper area on the PCB top side, as recommended in the datasheet.

The large ground layer on the bottom side of the board must be connected to the top side layer through multiple via holes.

In the case of ST7540 reference design, an area of about 0.2 cm^2 is put on the PCB top side for exposed pad soldering, while ground layer dissipating area on the bottom side is nearly 1.5 cm^2.

Figure 23. PCB copper dissipating area for ST7540 reference design board

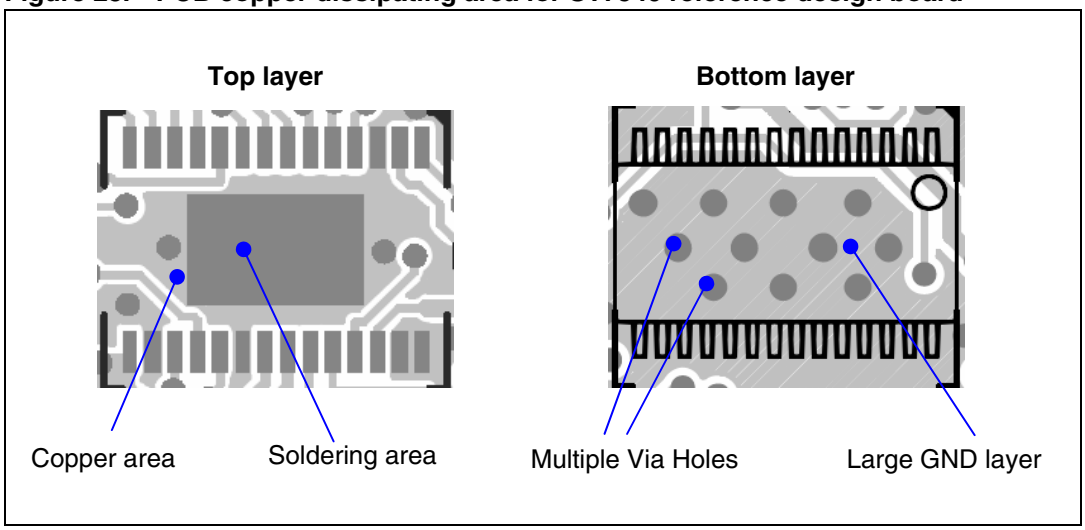

Even if the ST7540 features a built-in thermal shutdown circuitry which turns off the power amplifier (PA) when the die temperature (T_J) exceeds 170 °C. It is however recommended not to exceed 125 °C during normal operating conditions to ensure the functionality of the IC.

The relationship between junction temperature T_J and power dissipation during transmission P_D is described by the following formula:

Equation 7

$$T_J(t_{TX}, d) = T_A - P_D \bullet \theta_{JA}(t_{TX}, d)$$

where T_A is the ambient temperature (from -45 to +85 °C) and θ_{JA} is the junction to ambient thermal impedance of the ST7540 IC, which is related to the length of the transmission (t_{TX}) and to the duty cycle $d = t_{PKT} / (t_{PKT} + t_{IDLE})$, assuming a packet-fragmented transmission as illustrated by *Figure 24*.

Figure 24. Packet-fragmented transmission

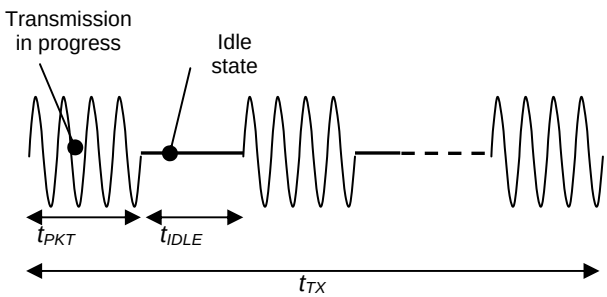

When soldered to a proper copper area on the PCB as explained above, the IC is characterized by a steady-state thermal impedance of about 35 °C/W. The transient of the thermal impedance θ_{JA} can be estimated by simulating a 6-cell equivalent model, as shown in *Figure 25*. The simulated curve vs. the transmission duration and the duty cycle is also given. It can be noticed that the transient of θ_{JA} takes several hundreds of seconds, after which the static value of 35 °C/W is reached.

Figure 25. Equivalent model of the thermal impedance θ_{JA} of the HTSSOP28 package with exposed pad

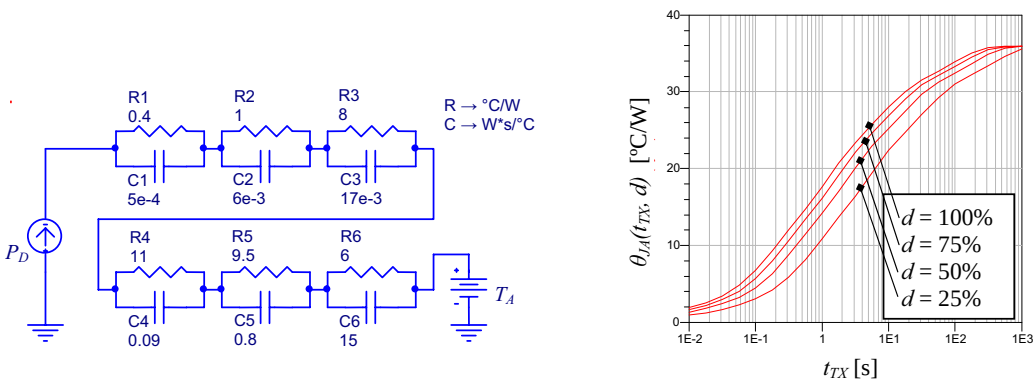

This means that during the transient phase (i.e. if the transmission time t_{TX} is some seconds or even less) the IC is able to dissipate power that is well above the one sustainable at steady state. For this reason, a complete thermal analysis requires taking into account the characteristics of the transmission, i.e. duty cycle and duration, determining the value reached by the thermal impedance and then the allowed power dissipation.

Actual dissipated power P_D can be calculated as:

Equation 8

$$P_D = P_{IN} - P_{OUT}$$

where $P_{IN}=V_{CC}*I_{CC}$ and $POUT=V_{OUT\ rms} * I_{OUT\ rms}$. Note that power consumption by receiving circuitry and linear regulators is considered negligible for thermal analysis purposes. The relationship between current absorption from the power supply (I_{CC}) and PA output current to the load (I_{OUT}) is shown in *Figure 26*. The value of V_{in} can be deduced from the load regulation curve of the SMPS, given in *Figure 37*.

Figure 26. Output current vs. supply current typical curve for ST7540 in Tx mode

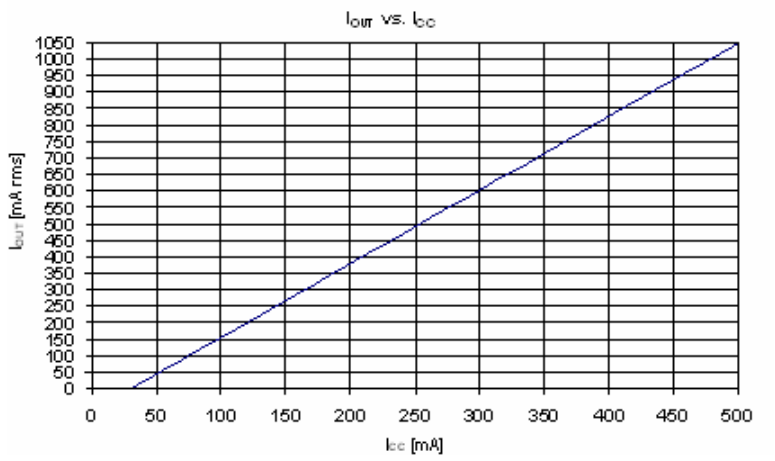

The transmission output level $V_{OUT\ rms}$ of 2 V and the current limit $I_{OUT\ rms(LIMIT)}$ of 500 mA, fixed for the ST7540 reference design, correspond to a maximum output power P_{OUT} of 1 W over a 4 Ω load. In these conditions, the required dissipation results equal:

Equation 9

$$P_{D(LIMIT)} = P_{IN(LIMIT)} - P_{OUT(LIMIT)} \cong (11.7V \bullet 0.25A) - (2V \bullet 0.5A) \cong 2W$$

Figure 27 shows the curve of P_D vs. the load impedance modulus according to the $V_{OUT\ rms}$ and $I_{OUT\ rms(LIMIT)}$ set for the ST7540 reference design.

Figure 27. Dissipated power vs. load impedance modulus typical curve for ST7540 reference design board

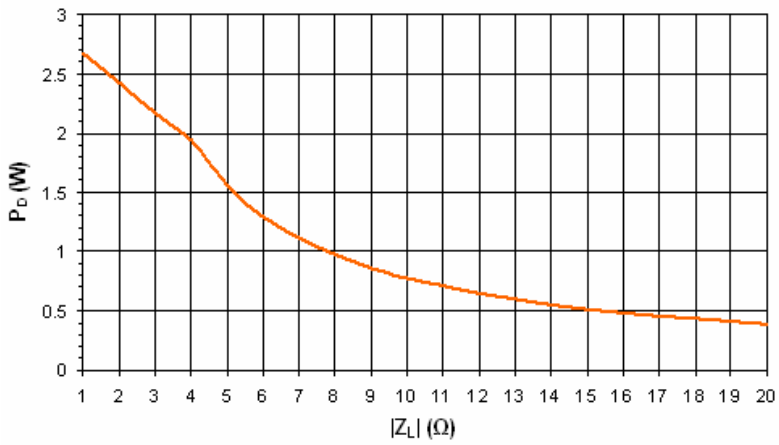

Referring to the relationship between dissipated power and temperature, it can be proven that in a continuous transmission, i.e. with θ_{JA} at its its steady-state value of 35 °C/W, a 2 W dissipation can be sustained in safe conditions if the ambient temperature remains below 55 °C. Instead, supposing a transmission time t_{TX} of 1 s and a duty cycle d of 50%, according to the graph of *Figure 25* the θ_{JA} would be 15 °C/W only. In this case a power dissipation of 2.7 W (corresponding to a 1 Ω load) is allowed over the entire ambient temperature range of the ST7540.

5.4 Oscillator section

The ST7540 crystal oscillator circuitry is based on a MOS amplifier working in inverter configuration.

This circuitry requires a crystal with a maximum load capacitance of 16 pF and a maximum ESR of 40 Ω

It is very important to keep the crystal oscillator and the load capacitors as close as possible to the device.

The resonant circuit should be far away from noise sources such as:

- Power supply circuitry
- Burst and surge protections
- Mains coupling circuits
- Any PCB track or via carrying a signal.

To properly shield and separate the oscillator section from the rest of the board, it is recommended to use a ground plane on both sides of the PCB, filling all the area below the crystal oscillator and its load capacitors. No tracks or vias should cross the ground plane except for the crystal connections.

It is also recommended to use a large clearance on the oscillator related tracks, to minimize humidity problems (see *Figure 28*).

Connecting the case to ground is also a good practice to reduce the effect of radiated signals on the oscillator.

Figure 28. A recommended oscillator section layout for noise shielding

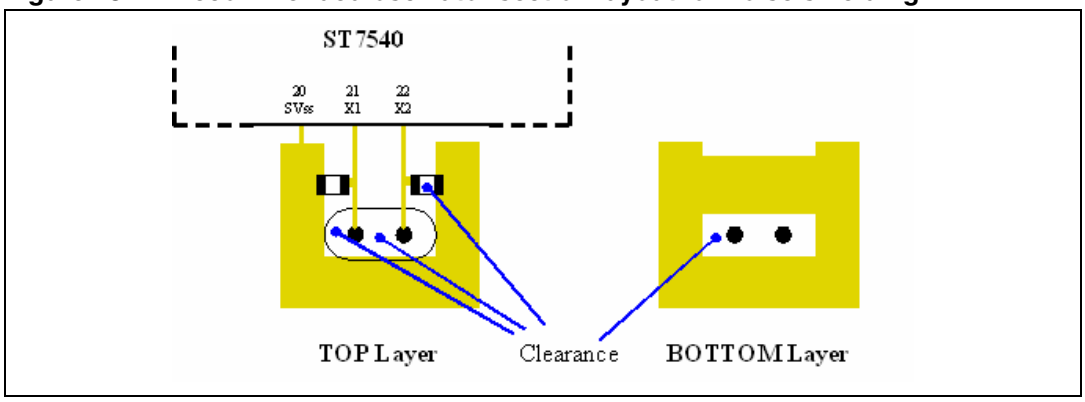

5.5 Surge and burst protection

The specific structure of the coupling interface circuit of the application is a weak point against high voltage disturbances that can come from the external environment. In fact an efficient coupling circuit with low insertion losses consequently allows a very low impedance path from the mains to the powerline interface of the device.

For this reason it is recommended to add some specific protection devices on the mains coupling path, to prevent high energy disturbances coming from the mains from damaging the internal circuitry of the ST7540.

The possible environments for this kind of application can be both indoor and outdoor: residential, commercial and light-industrial locations. To verify the immunity of the system to environmental electrical phenomena, a series of immunity specification standards and tests must be applied to the powerline application.

The requirements for ac-connected ports, fixed by the EN50065-2-3 document (part 7-immunity specifications), include EN610000-4-4 (electric fast transients), EN610000-4-5 (surges), EN610000-4-6 (RF out-of-band disturbances), EN610000-4-11 (voltage dips).

In particular, surge tests are specified as both common and differential modes at level +/- 4 kV, with pulse shape 1.2 x 50 µs. Fast transient burst tests are specified at level +/- 2 kV, with pulse shape 5 x 50 ns and pulse frequency 5 kHz.

Figure 29, *Figure 30* and *Figure 31* illustrate the protection criteria implemented in the ST7540 reference design.

Figure 29 and *Figure 30* show the protection against common mode disturbances. The BAV99 diodes are intended to prevent the voltage on PA_OUT and Rx_IN lines from going above the supply rail (Vcc for PA_OUT and VDC for Rx_IN) or below ground, with a tolerance of nearly 0.7 V.

Figure 31 describes the protection intervention in case of differential mode disturbances. A differential voltage higher than 12 V is shorted by the bidirectional power transil, which is the most robust protection and also the one capable to absorb most of the energy of incoming disturbances.

Figure 29. Common mode disturbances protection - positive disturbance

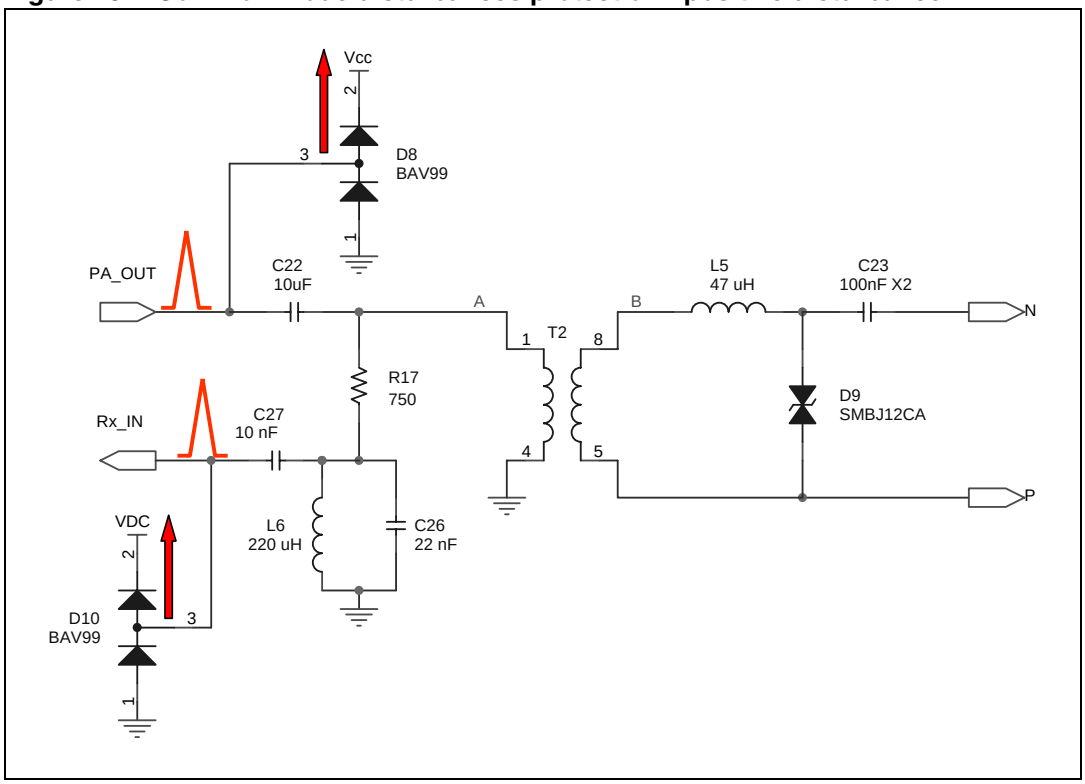

Figure 30. Common mode disturbances protection - negative disturbance

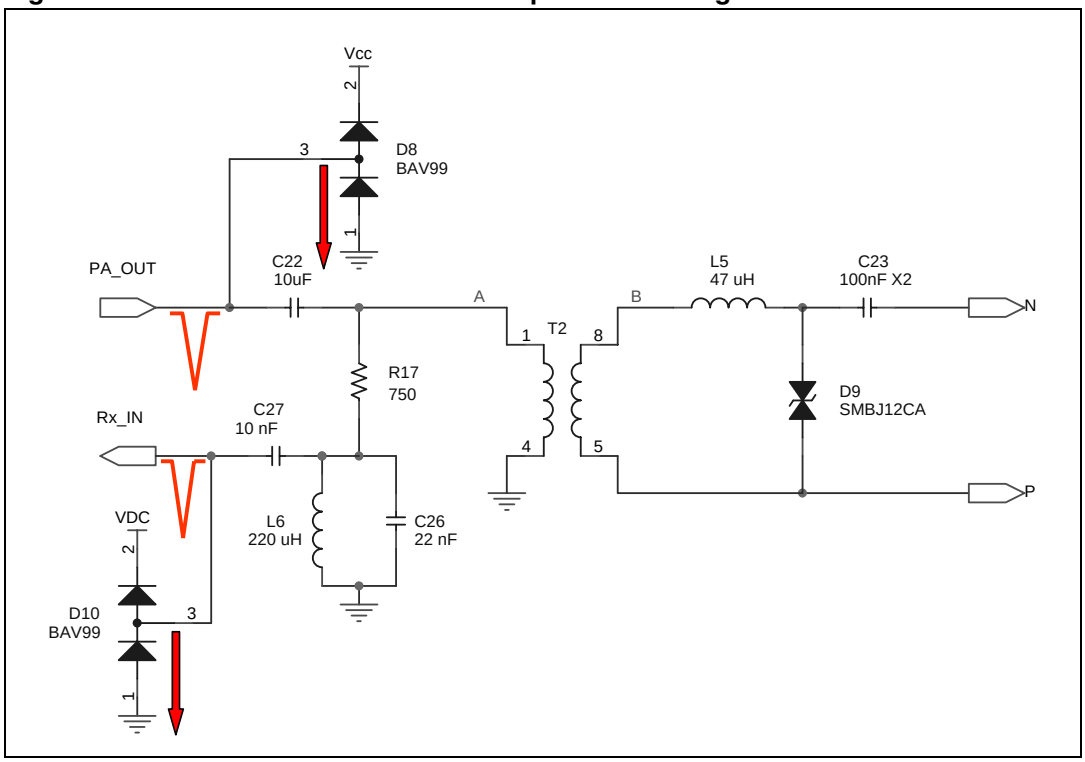

Figure 31. Differential mode disturbances protection

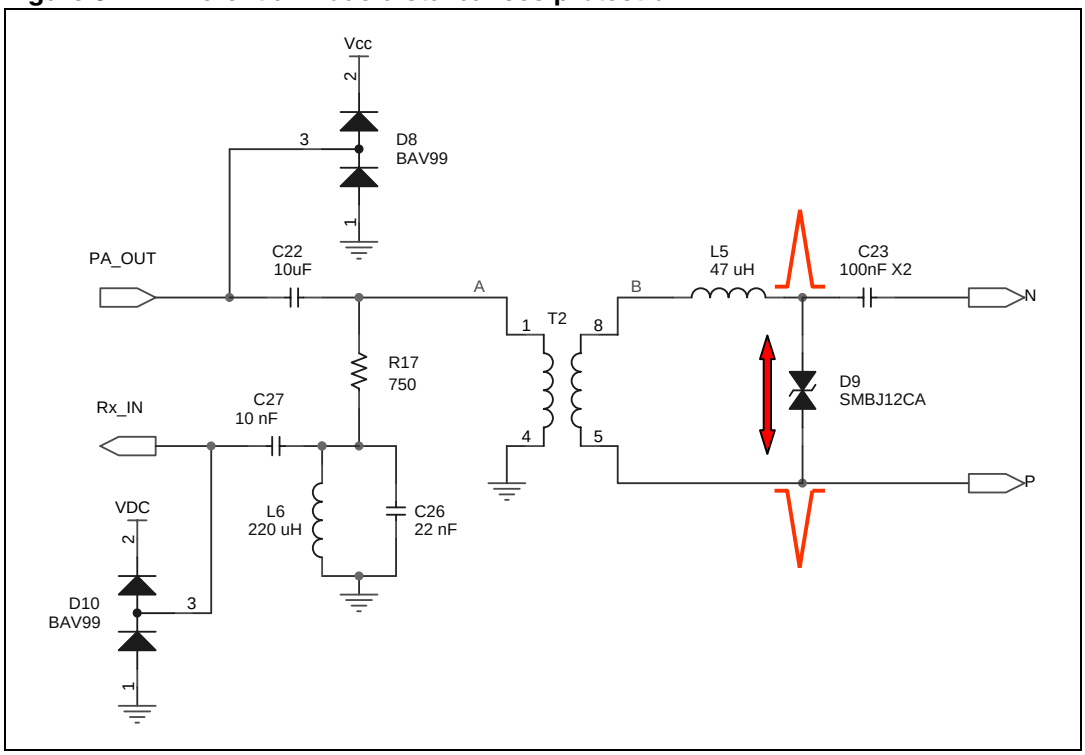

Figure 29 shows the protection against common mode positive disturbances. D8 protection diodes are able to quickly absorb fast transient positive disturbances higher than their 14 V

clamping voltage. D10 discharges to the Vcc supply any disturbance higher than the supply voltage plus a diode forward voltage.

Figure 30 indicates how the same D8 double-diode protection is able to clamp a common mode negative disturbance to ground, given that its level is lower than the forward voltage of the two diodes.

Figure 31 describes the protection intervention in case of differential mode disturbances. A differential voltage higher than 6.8 V is shorted by the D9 bidirectional transil. D9 is the most robust protection and also the one that is able to absorb most of the energy of any incoming disturbance.

5.6 50-pin connector for the EVALCOMMBOARD

Figure 32. Scheme of the connector for the EVALCOMMBOARD

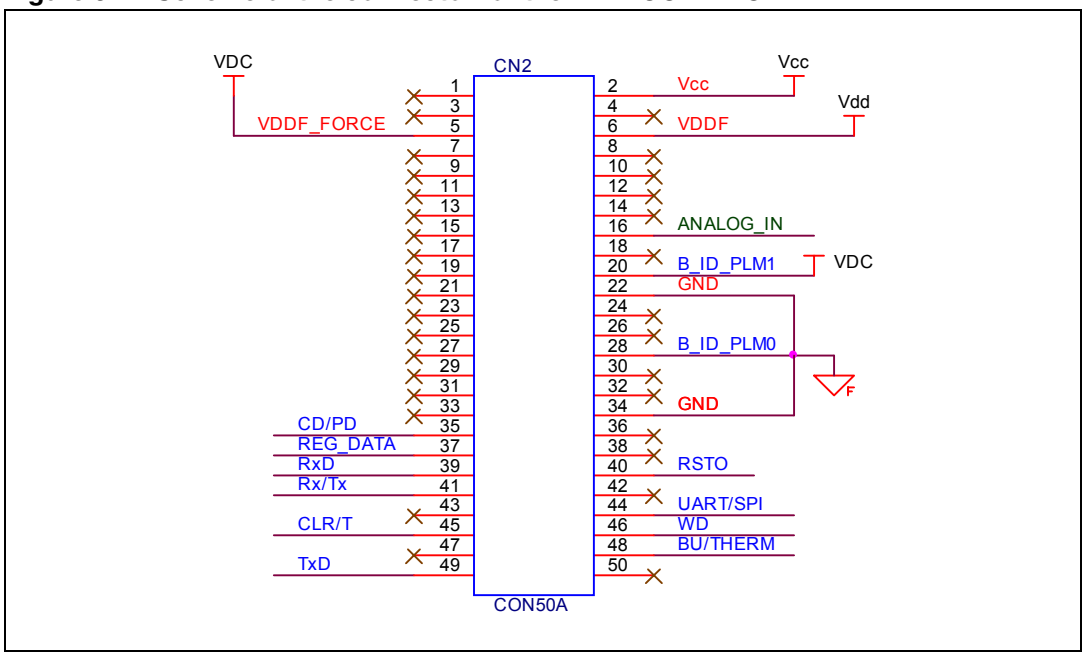

The ST7540 transceiver requires external digital control to communicate. This is done through an ST7 microcontroller which is accommodated on the EVALCOMMBOARD (see *Chapter 4 on page 11*). Communication with the ST7 microcontroller involves several signals, which can be gathered into 3 groups: Digital signals, Analog signals and Power connections. The signals for each group are listed in *Table 8*, *Table 9* and *Table 10*. Besides the ST7540 input and output signals, the link to the EVALCOMMBOARD includes:

- A 2-bit (B_ID_PLM_1 and B_ID_PLM_0) Board Identification Code, which identifies the hosted powerline transceiver. The microcontroller is able to recognize the ST7540 reference design board through a “10” binary configuration of this code.
- An Analog Input (ANALOG_IN), which is a line intended to implement a Received Signal Strength Indicator (a peak meter used to give an Rx signal level estimation).
- A VDDF_FORCE signal, which forces the microcontroller to refer digital interface levels to the VDDF (VDD) supply voltage provided by the ST7540 reference design board. This way both the modem and the microcontroller “talk” on the same digital levels.

Table 7. 50-pin connector digital signals

Pin number	Signal name	Description	Generated by
20	B_ID_PLM_1	Board ID for PLM applications (MSB)	PLC Board (VDC)
28	B_ID_PLM_0	Board ID for PLM applications (LSB)	PLC Board (GND)
35	CD/PD	Carrier or preamble detected signal	Modem
37	REG_DATA	Data communication or register access	µC
39	RxD	Serial data output	Modem
40	RSTO	Reset output	Modem
41	RxTx	Receiving or transmission selection	µC
44	UART/SPI	Host Interface selection	µC
45	CLR/T	Serial data clock	Modem
46	WD	Watchdog timer reset	µC
48	BU/THERM	- Rx mode: band-in-use detection signal - Tx mode: thermal event signal	Modem
49	TxD	Serial data input	µC

Table 8. 50-pin connector analog signals

Pin number	Signal name	Description	Generated by
8	ANALOG_IN	Analog input (for µC processing)	-

Table 9. 50-pin connector power connections

Pin number	Signal name	Description	Generated by
2	PLM_10 V	12 V power supply	PLC Board
4	VDD	3.3 V / 5 V power supply	Modem
5	VDDF_Force	Force microcontroller digital level to VDDF	PLC Board (VDC)
6	VDDF	Digital power supply	Modem (VDD)
22,34	GND	Ground	-

5.7 Power supply

The ST7540 reference design includes a specifically designed Switching Mode Power Supply (SMPS) circuit, based on the ST VIPer12AS-E device.

The VIPer12AS-E is a smart power device with a current mode PWM controller, a startup circuit and protections integrated in a monolithic chip using VIPower M0 technology. It includes a 27 Ω Mosfet with 730 V breakdown voltage and a 400 mA peak drain current limitation. The switching frequency is internally fixed at 60 kHz, in order to provide a good compromise between EMI performances and magnetic parts dimensioning.

The internal control circuit offers the following benefits:

- large input voltage range on VDD pin accommodates changes in supply voltage
- automatic burst mode in low-load condition
- overload and short-circuit protection in hiccup mode

The power supply is designed in isolated flyback configuration. Secondary regulation, implemented through an optocoupler and a Zener diode, takes the requested output tolerance for the specified application into account.

The main specifications are listed in *Table 10*.

Table 10. SMPS specifications

Parameter	Value
Input voltage range, V_{in}	85-265 V_{ac}
Output voltage, V_{OUT}	12 V±10%
Peak output current, $I_{OUT(MAX)}$	500 mA

In the input stage, an EMI filter is implemented (C_1-L_2 plus C_3-L_3-C_2) for both differential and common mode noise, in order to fit the requested standard.

The blocking diode D_2 and the clamping network (R_2-C_4) clamp the peak of the leakage inductance voltage spike, assuring reliable operation of the VIPer12AS-E. D_2 must be very fast recovery and very fast turn-on to avoid additional drain overvoltage. The clamp capacitor C_4 must be low-loss (with polypropylene or polystyrene film dielectric) to reduce power dissipation and prevent overheating, since it is charged with high peak currents by the energy stored in the leakage inductance.

A Leading Edge Blanking (LEB) circuit for leakage inductance spikes filtering has also been implemented (Q_1 - C_5 - R_3). It blanks the spike appearing at the leading edges of the voltage generated by the self-supply winding, greatly improving short circuit behavior.

The output rectifiers have been selected to take the maximum reverse voltage and the RMS secondary current into account. A STPS1H100 Power Schottky rectifier has been chosen for this purpose.

A LC filter has been added on the output (consisting of L_4, C_9 and C_{29}) in order to filter the high frequency ripple without increasing the output capacitors size or quality.

The transformer used for this application has three windings, since one of them is needed to supply the VIPer12AS-E. The primary inductance has been chosen as 2.7 mH and the reflected voltage has been set to 80 V.

A layer type has been chosen with EF12.6 or E13/7/4 core.

The characteristics are listed in *Table 11*.

Table 11. SMPS transformer specifications

Parameter	Value
Core geometry	SRW12.6ES or E13/7/4
Primary inductance	2.7 mH±10%
Leakage inductance	180 µH max

Table 11. SMPS transformer specifications (continued)

Parameter	Value
N_P	224 turns – 0.1 mm
N_{AUX}	39 turns – 0.1 mm
N_{SEC}	31 turns – 0.2 mm (TEX-E wire)
Withstanding voltage	4 kV_{RMS}

Some significant waveforms are represented in the following figures. *Figure 33* and *Figure 34* show typical waveforms in both open-load and full-load conditions.

In any SMPS, protection against an output short-circuit is very important. All tests have been done by shorting the SMPS output at maximum input voltage. The results are given in *Figure 35*.

The main parameters are the drain-source voltage (V_{DS}), the output current (I_{OUT}) and the supply voltage (V_{DD}).

The output current is an important parameter to be checked during shorts. Although the output current peaks are quite high, the mean value is very low, thus preventing component melting for excessive dissipation. In this way, the output rectifier, transformer windings and PCB traces don't get overstressed. This assures system reliability against long-term shorts.

In case of device overheating, the integrated thermal protection stops the device operation until the device temperature falls.

The startup phase could be critical for the SMPS. Output overshoot occurs if the circuit is not properly designed. Care must be taken in designing a proper clamp network in order to prevent voltage spikes, due to leakage inductance, from exceeding the breakdown voltage of the device (730 V minimum value).

The startup transient is shown in *Figure 36*. It may be noted that the maximum drain-source voltage doesn't exceed the minimum breakdown voltage BV_{DSS}, with a reasonable safety margin.

Finally, load regulation is presented in *Figure 37*, for different input voltages. With $230V_{ac}$, the output voltage ranges from 12.3V to 11.1 V, within the requested tolerance.

Figure 33. Typical waveforms at 230 V_{ac}: open load

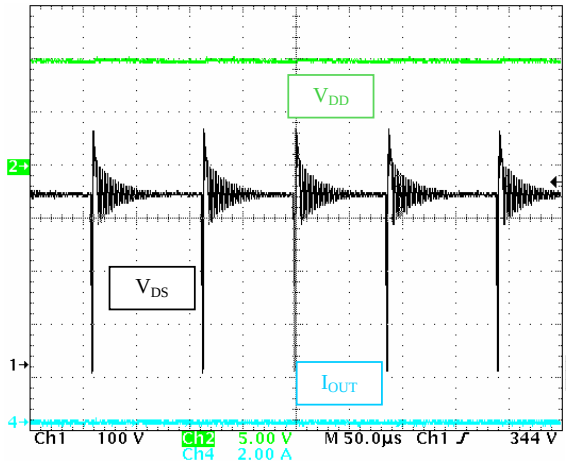

Ch1 freq - 9.62 kHz (black)
Ch2 mean - 9.90 V (green)

Figure 34. Typical waveforms at 230 V_{ac}: full load

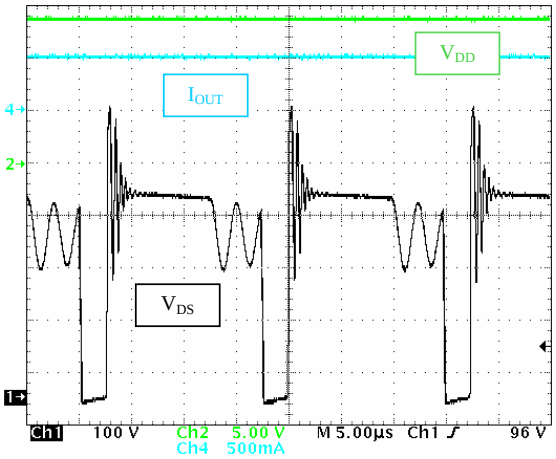

Ch1 freq - 57.71 kHz (black)
Ch2 mean - 13.79 V (green)
Ch4 max - 503 mA (light blue)

Figure 35. Typical waveforms at 265 V_{ac}: short-circuit

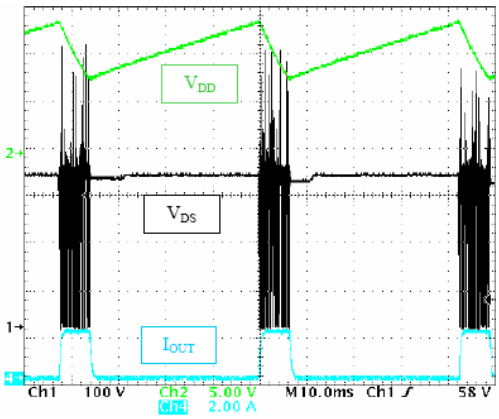

Ch1 freq - 23.50 Hz (geen)
Ch4 max - 2.08 A (light blue)
Ch4 meann - 383 mA (light blue)

Figure 36. Typical waveforms at 265 V_{ac}: startup

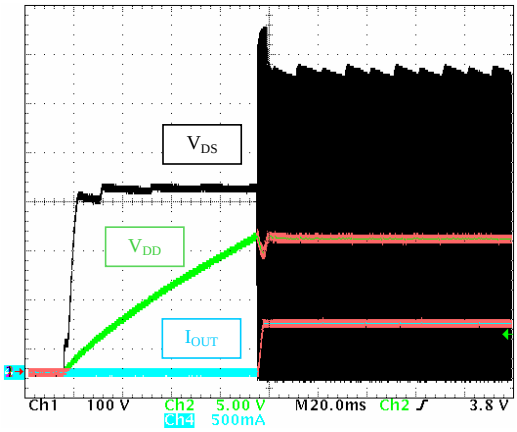

Ch1 max - 702 V (black)
Ch2 mean - 19.72 V (green)
Ch4 max - 500 mA (light blue)

Figure 37. Load regulation

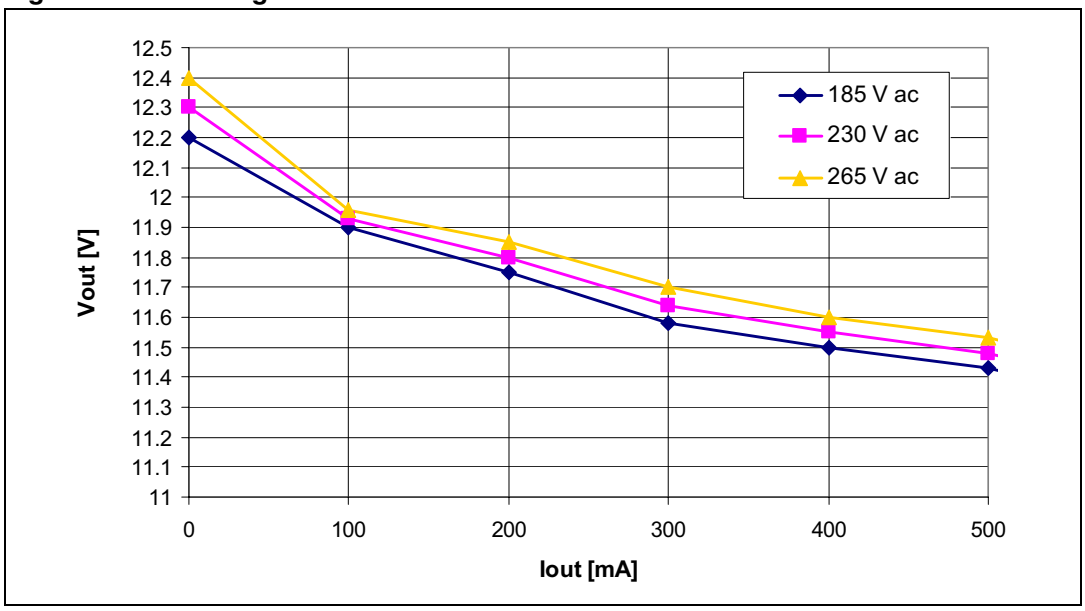

Figure 38 shows the efficiency vs. output current curve. Minimum efficiency occurs at low-load condition, as expected from any SMPS. This is not an issue for our application, since low efficiency corresponds also to low power consumption and thus to low dissipation.

On the other hand, at output current values over 500 mA (full-load condition), both the transformer and the VIPer are forced to operate close to their current limitations and thus the efficiency is reduced.

In general, efficiency is affected by the losses which are due to R1 (series input resistor limiting in-rush current) and to the filtering on both the primary and secondary side. Filtering is more important than efficiency because a powerline communication appliance has very restrictive EM disturbance limits and it is also highly sensitive to noise coming from the power supply.

Figure 38. SMPS efficiency curve

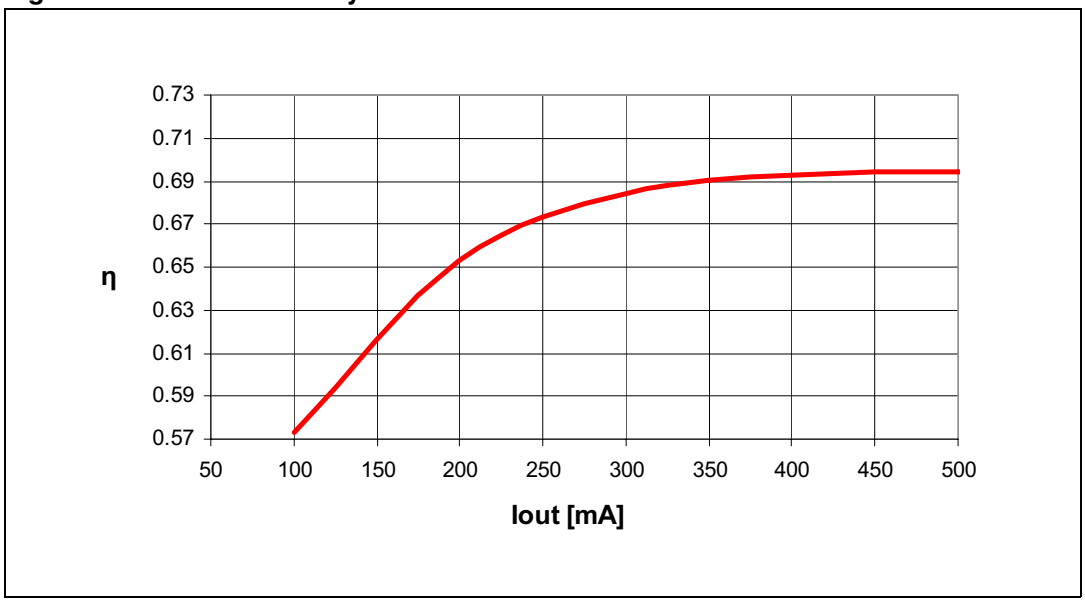

6 Performance and ping tests

Our evaluation system includes a ping test embedded into the ST7540 powerline modem demonstration kit and the FW of the EVALCOMMBOARD. This feature allows the user to perform in-field communication tests and to evaluate reachability of PLC network nodes.

A ping session is based on a master board sending a sequence of messages to one or more slave boards. if the messages are correctly received by the slave boards, they are resent one by one to the master.

The PC connected to the master keeps statistics of the messages sent and correctly received by the slave boards, thus making it possible to get a numerical evaluation of the reachability of each node corresponding to a slave.

Figure 39 represents the ping window of the ST7540 powerline modem demonstration kit for the master node. The main characteristics of this tool are indicated in red.

Figure 39. ST7540 powerline modem demonstration kit window for the master board

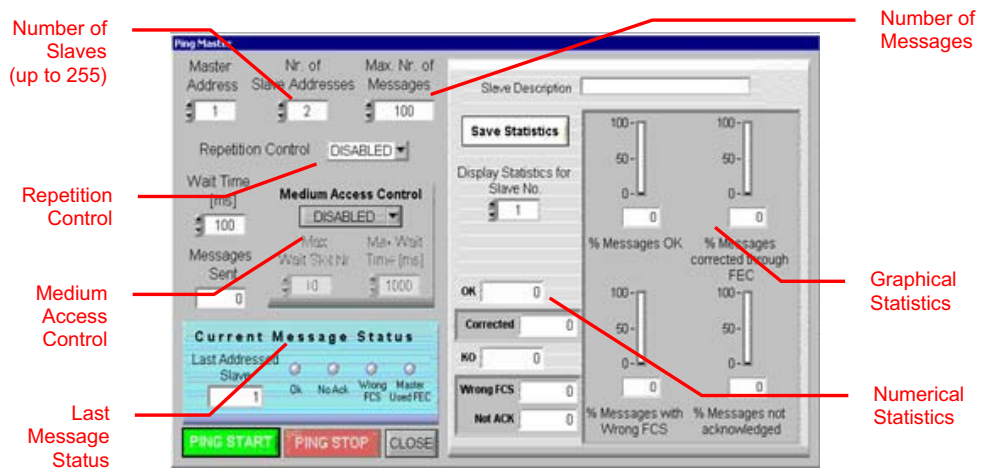

Special controls are included in the ping test:

- Repetition control: may be used to improve communication reliability. When repetition control is enabled, a message not responded by a slave is resent up to three times before sending a new message
- Medium access control: defines what type of medium access has to be used. Choices are "none", "BU" or "PD". In the last two cases, messages are sent to the slave only if the BU or CD/PD lines of the ST7540 modem are not active. If the PD setting is selected, the content of the ST7540 internal control register is changed to select "Preamble" as the detection method.

For further details about ST7540 powerline modem demonstration kit, please refer to the user manual UM0239 "ST7540 power line modem demo kit graphical user interface".

7 Application ideas

7.1 Three-phase architecture

Figure 40. Scheme of principle for three-phase architecture

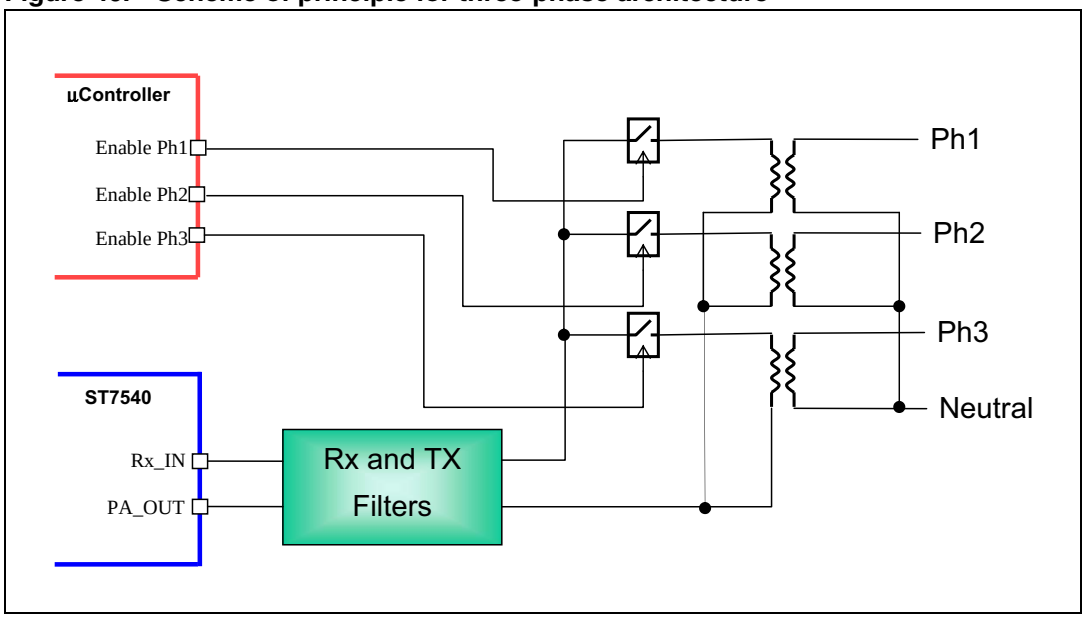

The ST7540 modem can be used to communicate on a three-phase network. A microcontroller should switch communication between the three phases, since the modem can transmit/receive only on one phase at a time.

In *Figure 40*, the microcontroller uses three output lines as Enable signals for three switches (typically opto-switches), one for each phase line. For the ST7540, there is no difference with respect to single-phase communication.

7.2 Zero crossing detector

Often, in AMR (Automatic Meter Reading) applications, it is necessary to know which phase each meter is placed on. This information is mainly useful at system level in order to check for unexpected losses on the distribution line due to failures or energy theft.

Since the three phases on the mains are sinusoidal waveforms with a phase shift of 120° from each other (equal to 6.67 ms at 50 Hz / 5.5 ms at 60 Hz), the simplest way to associate the meter to its correct phase is to synchronize the transmission to the phase itself. To do that, the meter should always start its transmission synchronously with zero voltage transitions on its phase and the concentrator should measure the delay between the beginning of the incoming frame and the transition on its reference phase. The act of detecting the zero voltage transitions on the mains phase is called zero crossing detection.

Figure 41 and *Figure 42* show two possible zero crossing detector circuit implementations. N and P mean neutral and phase lines respectively at the meter/concentrator side, while ZC_OUT is a digital output to the application microcontroller.

Particular attention should be paid to current rating (see solution in *Figure 42*) The maximum allowable current for 1W dissipation, sustainable by two ½ W resistors in a series, is 4.5 mA rms = 6.4 mA peak.

Such a current flowing into the LED of the optocoupler can minimize the delay between the actual zero crossing of the mains voltage and the edge of the ZC_OUT signal, if the optocoupler has been chosen to have an activation current I_F about 10 times smaller than the peak current.

Figure 43 shows the behavior of the ZC_OUT digital signal versus the AC Mains Input for both circuits.

Warning: The circuit in *Figure 41* is only applicable to a nonisolated board topology. It is not possible to implement it directly on the ST7540 reference design.

Figure 41. Schematic of a zero crossing detection circuit for nonisolated coupling

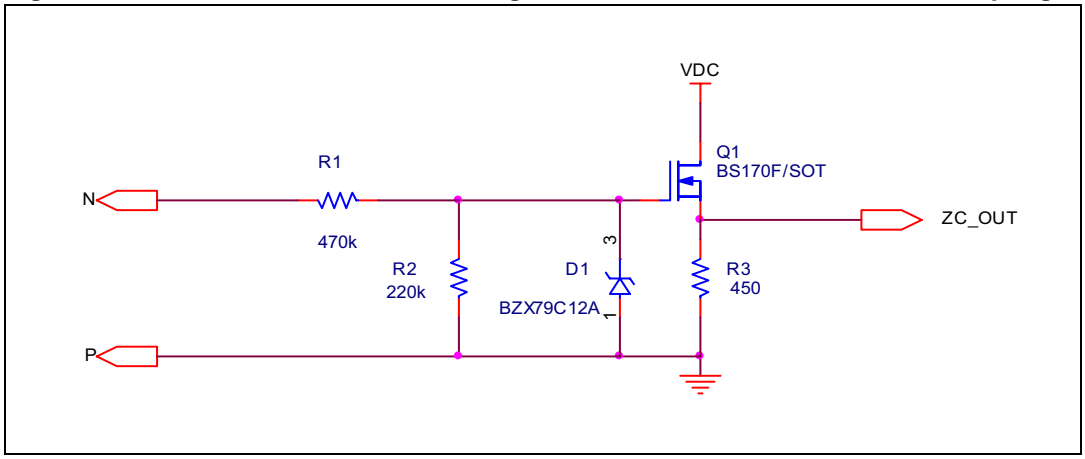

Figure 42. Schematic of a zero crossing detection circuit for isolated coupling

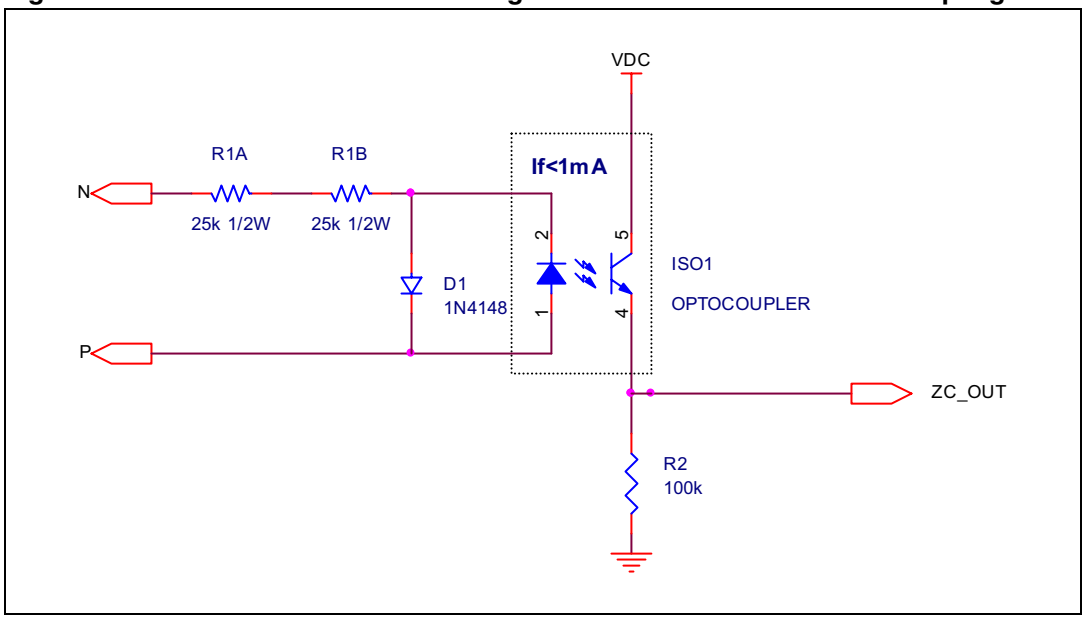

Figure 43. ZC_OUT vs. AC mains waveforms

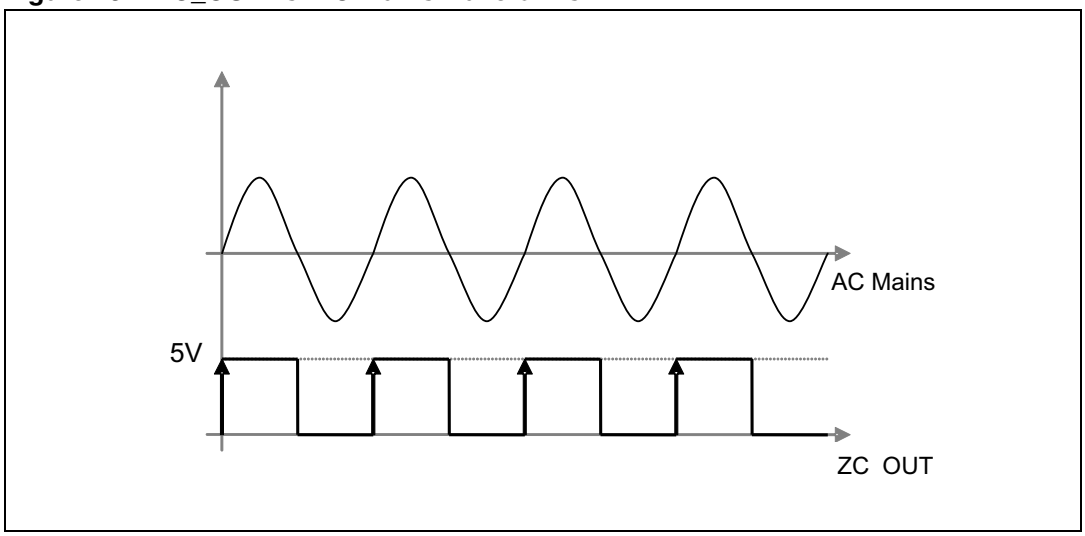

7.3 Received Signal Strength Indicator (RSSI)

In many application fields, measuring the strength of the incoming signal is useful to:

- Evaluate the SNR (Signal to Noise Ratio) at the node
- Choose the best routing through the network (if repeaters are allowed)

One possible implementation for the Received Signal Strength Indicator (RSSI) is the one depicted in *Figure 44*, where a Peak Detector is used to measure the amplitude of the incoming signal.

Figure 44. Peak detector electrical schematic

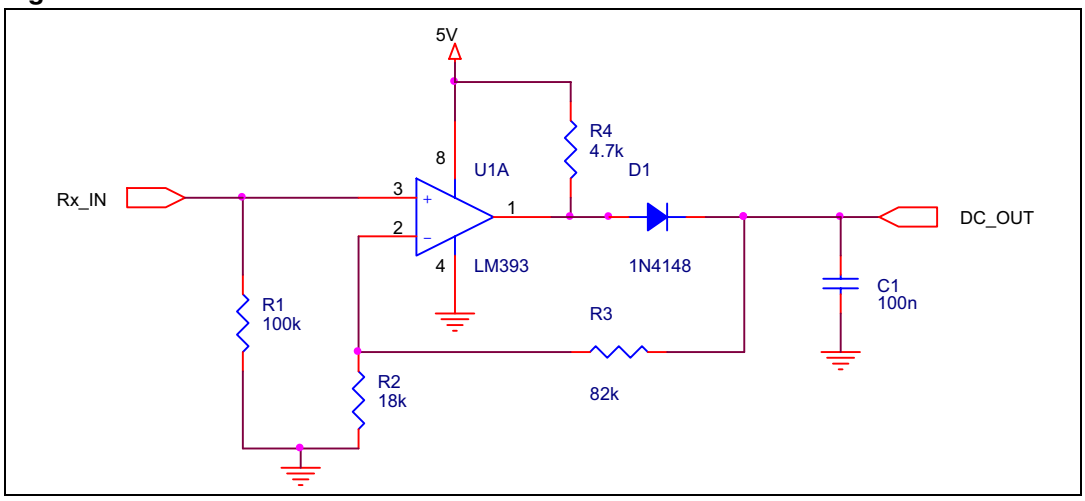

The schematic above is based on a simple diode-capacitor (D1-C1) circuit improved with an LM393 comparator so that:

- The comparator eliminates the diode reverse voltage.
- The feedback network (R3/R2) introduces a gain of 4 to improve performance against low amplitude signals.

In the end this circuit gives, on DC_OUT line, a DC voltage proportional to the AC peak-to-peak level at the input. *Figure 45* shows the measured behavior of this circuit with a given pure sinusoidal waveform at the input. The DC_OUT signal should be converted through an integrated A/D converter by the application microcontroller.

Figure 45. Measured DC_OUT Vs. AC_IN peak detector response

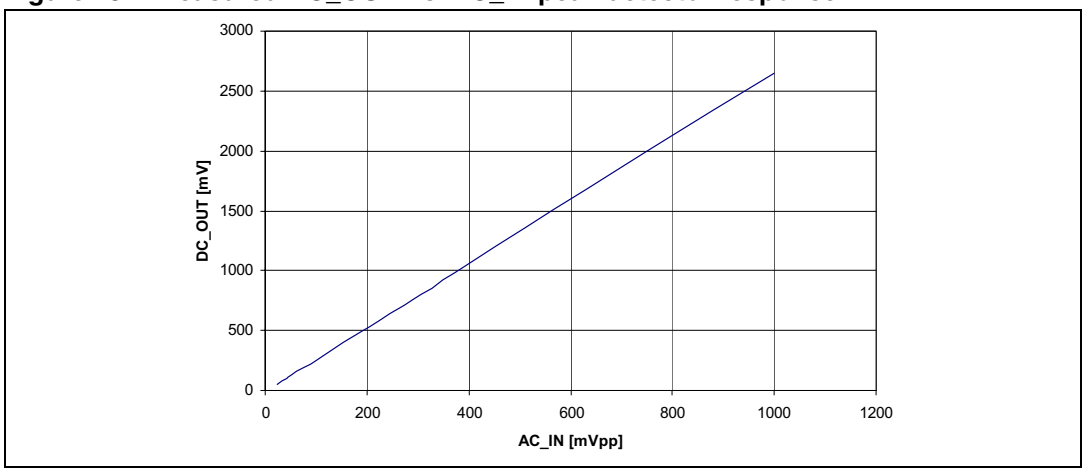

7.4 Nonisolated coupling

A possible alternative solution for line coupling is a nonisolated circuit. An example is shown in *Figure 46*, in which the transformer T2 has been substituted with the shunt inductor L7. The value of the inductor has been chosen to give about 100 dB rejection to the mains voltage through a C23-L7 high pass filter. Advantages arising from nonisolated topologies

mainly include cost optimization, eliminating the need for isolation components, and circuit simplicity.

Figure 46. Example schematic for nonisolated solution

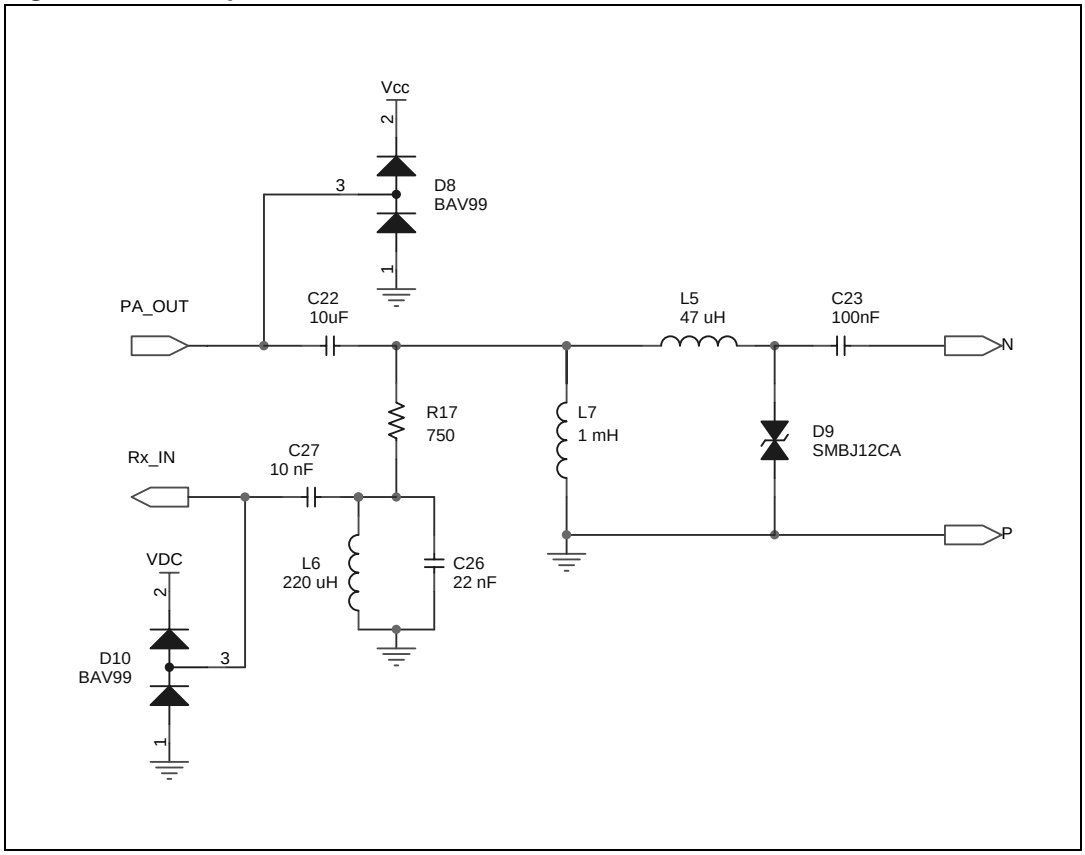

7.5 DC powerline applications

The ST7540 reference design can be adapted to communicate over a DC power line. In this case, the schematic of *Figure 46* has to be referred to as line coupling, with two modifications: L7 can be removed and the C23 capacitor can be substituted with a lower voltage ceramic component.

A DC-DC converter will substitute the ac-dc SMPS. For example, the L5970 DC-DC step-down switching regulator can be used in case of 24 V bus to obtain the 12 V supply for the ST7540 device.

7.6 110 and 132.5 kHz coupling circuit

In this paragraph application circuits for CENELEC band B and C are provided. The 110 and 132.5 kHz channels of the ST7540 transceiver are suitable for home automation applications and in general for applications not subject to the European AMR regulations.

Figure 47 and *Figure 48* show the schematics for the line coupling interface tuned respectively to the 110 and 132.5 kHz channels.

Figure 47. Line coupling interface for 110 kHz channel

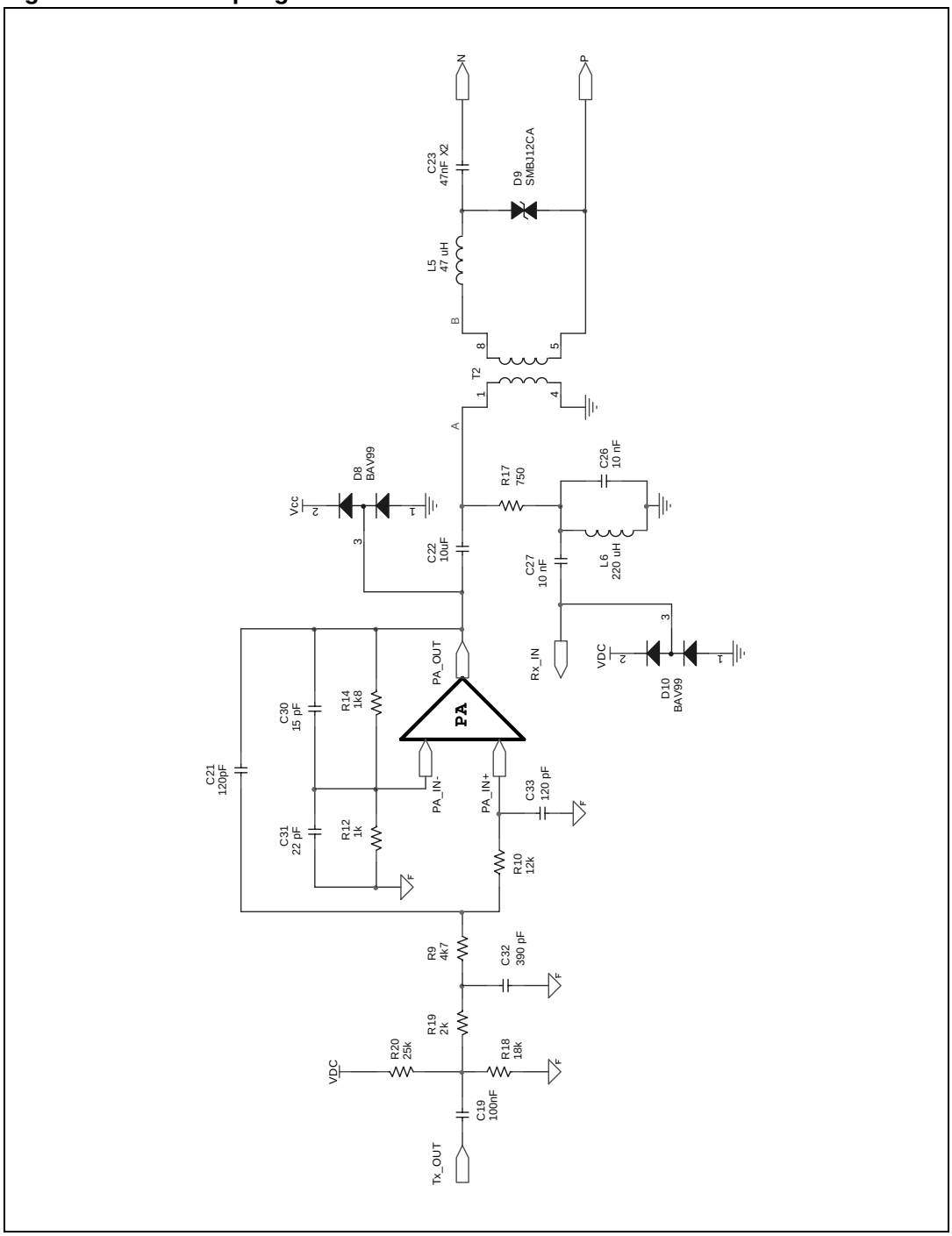

Figure 48. Line coupling interface for 132.5 kHz channel

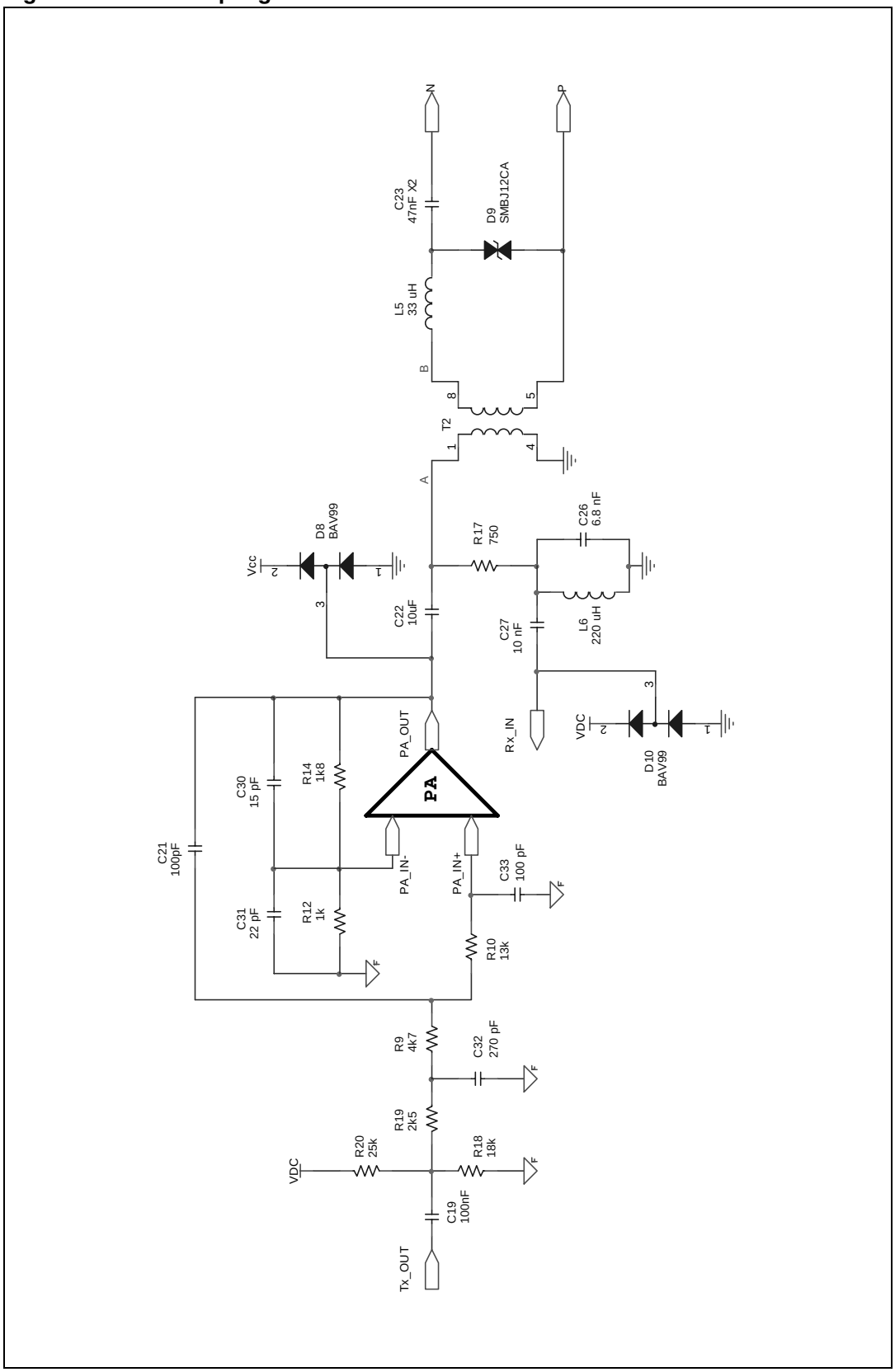

8 Troubleshooting

In this section the most frequently asked questions are described.

1. Problem: the ST7540 reference design board does not work at all.

What to check:

a) Check that the AC mains supply cable is well connected to CN1.
b) Check if the green LED D6 is on.
c) Check the voltage on the Vcc test pad. The value must be about 12 V.

2. Problem: the ST7540 reference design board is not responding.

What to check:

a) Check the VDC voltage. The value must be about 5 V. In a noisy environment, spurious voltage spikes could compromise the internal linear regulator startup.
b) If Vdd is not externally connected to the VDC line, verify the Vdd voltage. The value must be about 3.3 V.
c) Check if the MCLK selected frequency is present.
d) Check the connection between the reference design board and the EVALCOMMBOARD and the connection between the EVALCOMMBOARD and the PC.

3. Problem: the ST7540 reference design board does not transmit.

What to check:

a) Check the voltage on the PA_OUT test pad with the oscilloscope ground probe connected to the SVss signal ground. The programmed carrier frequency must be present on the PA_OUT line.
b) Check there is no short-circuit impedance on the mains at the transmitting frequency.
c) Check the CL voltage. It fixes the current limiting threshold. It has to be lower than 1.9 V, otherwise the IC is put in current-limit mode.

If the current-limit mode is forced on the transceiver, modify the value of the R6 feedback resistor to exit from limitation according to the actual load forced by the mains network.

4. Problem: the ST7540 reference design board transmits only for a short time.

What to check:

a) Check the transmission timeout setting. It has to be disabled for continuous transmission.
b) Check if continuous or single sequence transmission is selected in the Tx panel of the ST7540 powerline modem demonstration kit window. Select continuous mode to be able to force a lasting transmission.
c) Check there is no short-circuit impedance on the mains at the selected transmitting channel.

5. Problem: the ST7540 reference design board does not receive.

What to check:

a) Check if the carrier frequency is present on the RAI pin voltage with the oscilloscope ground probe connected to the DVss signal ground pin.

b) Check that the transmitting frequency matches the carrier frequency selected through the control register panel of the ST7540 powerline modem demonstration kit window.

c) Check the preamble detection setting on the control register panel of the ST7540 powerline modem demonstration kit window.

d) Check if data are present on the RxD pin.

6. Problem: during a ping test or a transmission test, the ST7540 reference design board shows high bit error rate.

Note: This point refers to a half-duplex communication involving two ST7540 reference design boards communicating with each other.

What to check:

a) Check that both reference design boards are programmed to transmit/receive on the same carrier frequency.

b) Check preamble detection setting on the control register panel of the ST7540 powerline modem demonstration kit window.

c) Check if the carrier frequency is present on the RAI pin voltage with the oscilloscope ground probe connected to the DVss signal ground pin.

d) Check if data are present on the RxD pin.

Appendix A Board layout

Figure 49. PCB layout - component placing

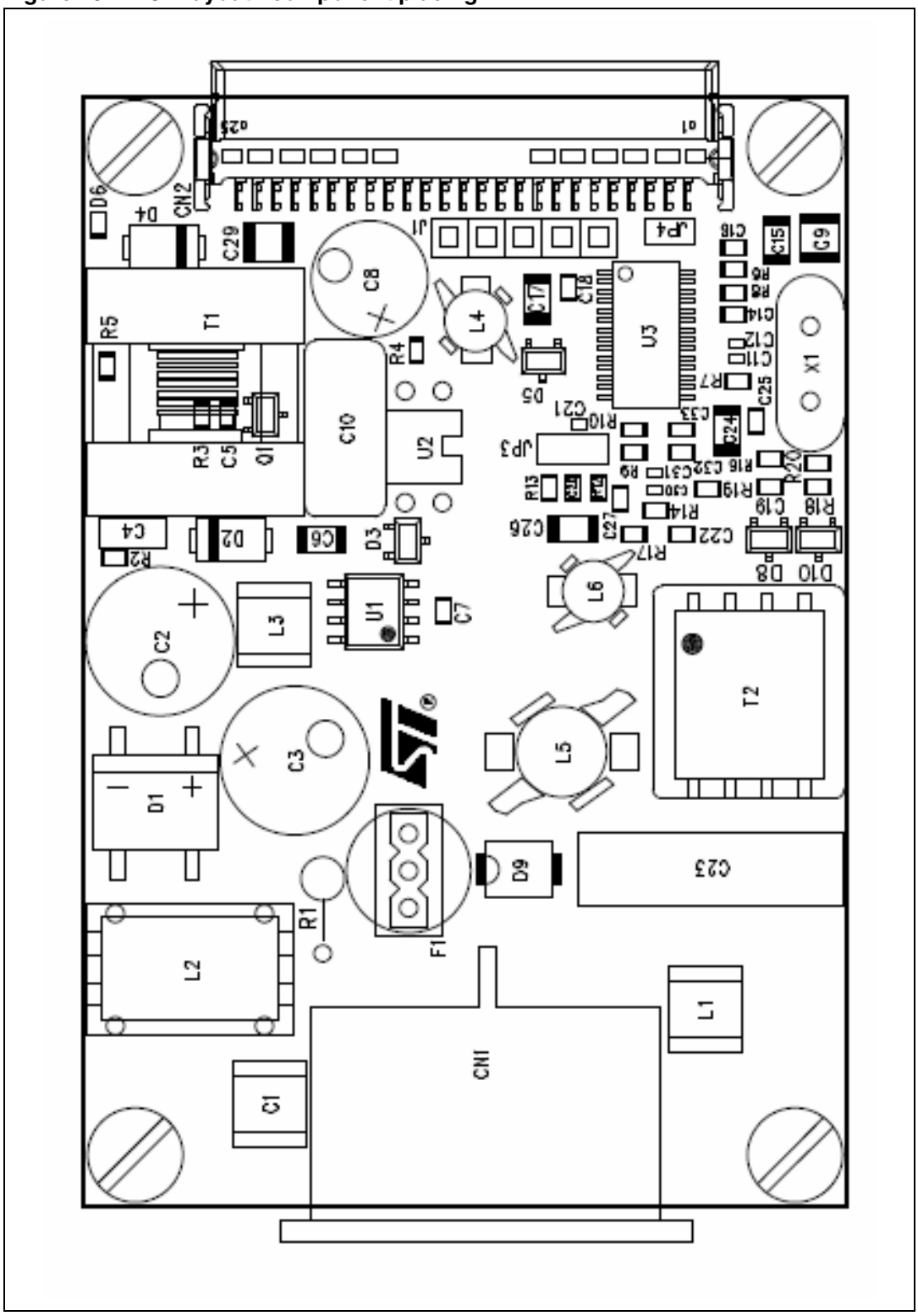

Figure 50. PCB layout - top view

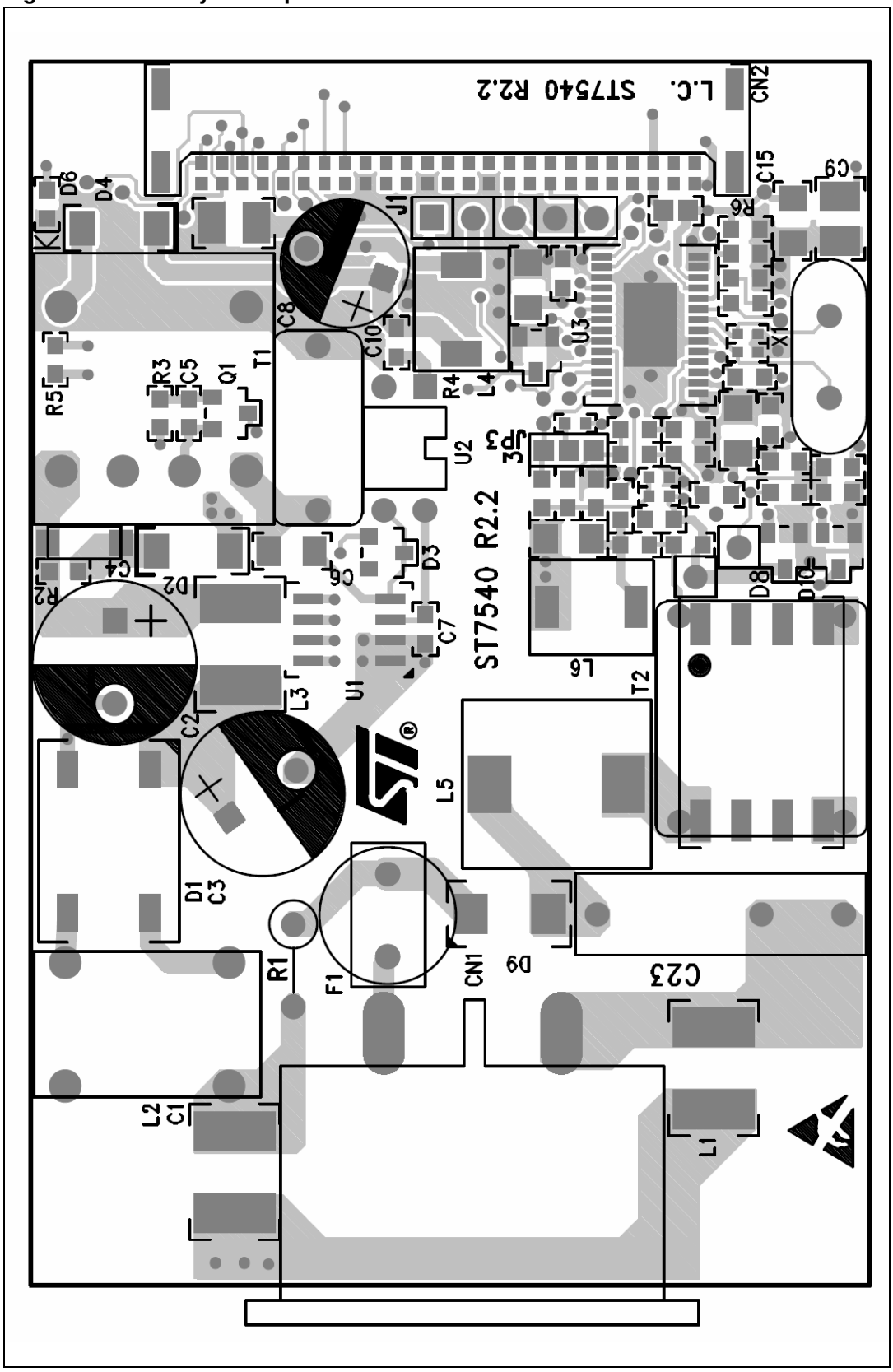

Figure 51. PCB layout - bottom view

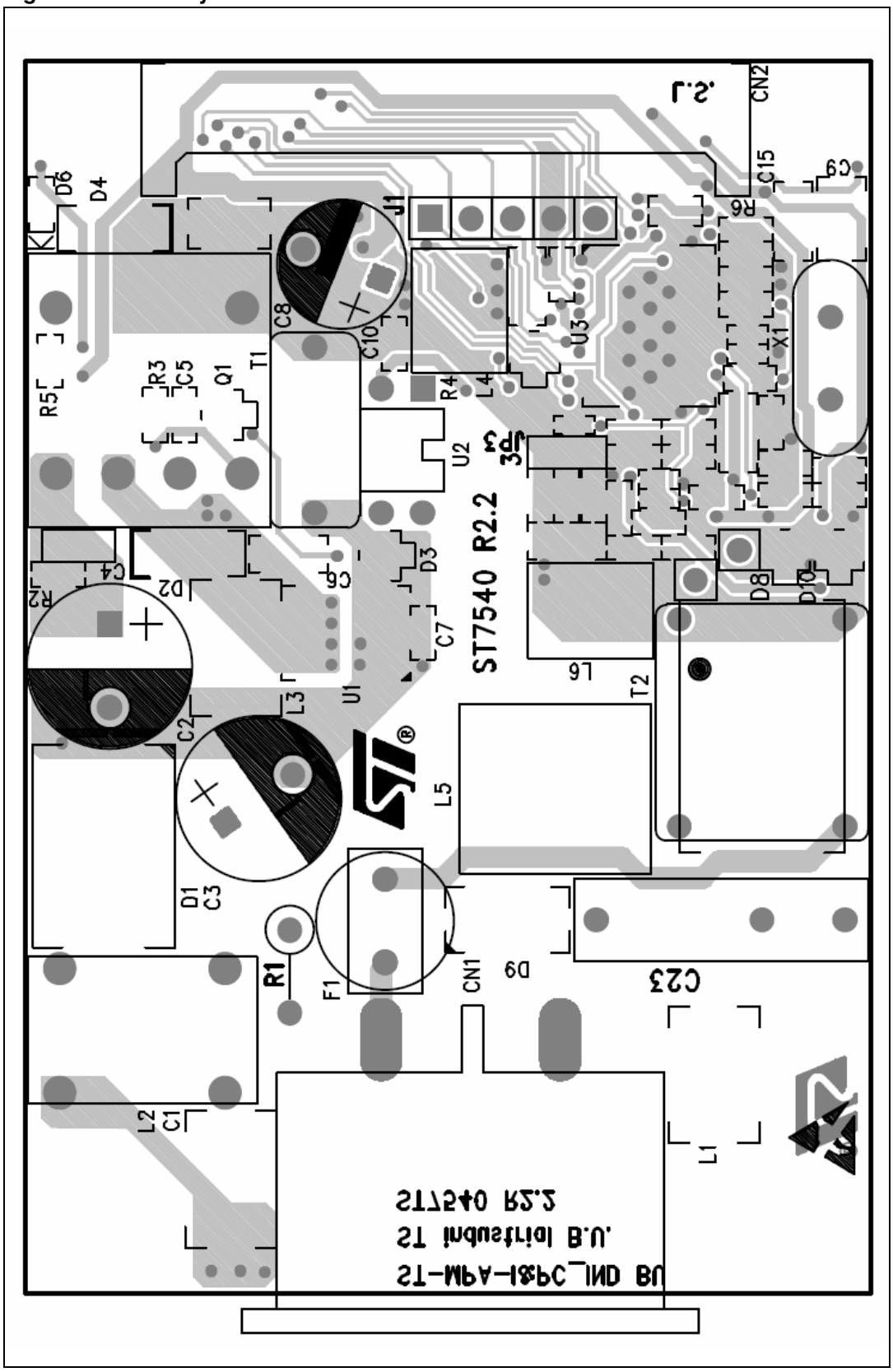

9 List of normative references

EN50065: Signaling on low voltage electrical installations in the frequency range 3 kHz to 148.5 kHz.

- Part 1: General requirements, frequency bands and electromagnetic disturbances
- Part 2-1: Immunity requirements
- Part 4-2: Low voltage decoupling filters - safety requirements
- Part 7: Equipment impedance

10 Revision history

Table 12. Document revision history

Date	Revision	Changes
10-Jan-2007	1	First issue
28-Jan-2008	2	*Figure 2*, *7*, *8*, *9*, *23*, *46*, *49*, *50* and *51* modified *Figure 47* inserted *Table 3*, *4* and *5* modified *Section 7.5* and *7.6* inserted *Equation 2* modified

Please Read Carefully:

Information in this document is provided solely in connection with ST products. STMicroelectronics NV and its subsidiaries (“ST”) reserve the right to make changes, corrections, modifications or improvements, to this document, and the products and services described herein at any time, without notice.

All ST products are sold pursuant to ST’s terms and conditions of sale.

Purchasers are solely responsible for the choice, selection and use of the ST products and services described herein, and ST assumes no liability whatsoever relating to the choice, selection or use of the ST products and services described herein.

No license, express or implied, by estoppel or otherwise, to any intellectual property rights is granted under this document. If any part of this document refers to any third party products or services it shall not be deemed a license grant by ST for the use of such third party products or services, or any intellectual property contained therein or considered as a warranty covering the use in any manner whatsoever of such third party products or services or any intellectual property contained therein.

UNLESS OTHERWISE SET FORTH IN ST’S TERMS AND CONDITIONS OF SALE ST DISCLAIMS ANY EXPRESS OR IMPLIED WARRANTY WITH RESPECT TO THE USE AND/OR SALE OF ST PRODUCTS INCLUDING WITHOUT LIMITATION IMPLIED WARRANTIES OF MERCHANTABILITY, FITNESS FOR A PARTICULAR PURPOSE (AND THEIR EQUIVALENTS UNDER THE LAWS OF ANY JURISDICTION), OR INFRINGEMENT OF ANY PATENT, COPYRIGHT OR OTHER INTELLECTUAL PROPERTY RIGHT.

UNLESS EXPRESSLY APPROVED IN WRITING BY AN AUTHORIZED ST REPRESENTATIVE, ST PRODUCTS ARE NOT RECOMMENDED, AUTHORIZED OR WARRANTED FOR USE IN MILITARY, AIR CRAFT, SPACE, LIFE SAVING, OR LIFE SUSTAINING APPLICATIONS, NOR IN PRODUCTS OR SYSTEMS WHERE FAILURE OR MALFUNCTION MAY RESULT IN PERSONAL INJURY, DEATH, OR SEVERE PROPERTY OR ENVIRONMENTAL DAMAGE. ST PRODUCTS WHICH ARE NOT SPECIFIED AS "AUTOMOTIVE GRADE" MAY ONLY BE USED IN AUTOMOTIVE APPLICATIONS AT USER’S OWN RISK.

Resale of ST products with provisions different from the statements and/or technical features set forth in this document shall immediately void any warranty granted by ST for the ST product or service described herein and shall not create or extend in any manner whatsoever, any liability of ST.

ST and the ST logo are trademarks or registered trademarks of ST in various countries.

Information in this document supersedes and replaces all information previously supplied.

The ST logo is a registered trademark of STMicroelectronics. All other names are the property of their respective owners.

© 2008 STMicroelectronics - All rights reserved

STMicroelectronics group of companies

Australia - Belgium - Brazil - Canada - China - Czech Republic - Finland - France - Germany - Hong Kong - India - Israel - Italy - Japan - Malaysia - Malta - Morocco - Singapore - Spain - Sweden - Switzerland - United Kingdom - United States of America

www.st.com